CHELICHANA

PRODUCT CATALOGUE

Table of Contents

ABOUT US

LOWER BODY

UPPER BODY

BENCHES

CAGES

CAGE ATTACHMENTS

STORAGES

WEIGHTS

BARBELLS

DUMBELLS

KETTLEBELLS

FUNCTIONAL EQUIPMENT

CARDIO

FLOORS

APPAREL

OUTDOOR

In Chelichana we're not just building equipment; we're crafting experiences.

WHO WE ARE

With 20 years of unparalleled experience, we've helped gyms, studios, and home users across the globe achieve their fitness goals through cutting-edge, high-performance products. Thanks to our background in manufacturing and our deep understanding of the strength community, we can offer quality, highly customizable strength equipment for indoor and outdoor spaces.

From conceptualization to production, we carefully craft each piece to exceed the most demanding standards, earning us a reputation as a trusted partner for fitness enthusiasts and wellness professionals.

Driven by a passion for fitness and a dedication to customer satisfaction, we continue to push the boundaries of what's possible, delivering innovative solutions that enhance athletic performance and improve quality of life.

BUILDING A STRONG, PROPORTIONAL LOWER BODY HAS NEVER BEEN EASIER. OUR STATE-OF-THE-ART MACHINES ARE ENGINEERED TO HELP YOU SCULPT SHAPELY GLUTES, POWERFUL QUADS, AND MASSIVE CALVES.

CH-D01

LEG EXTENSION 2.0

108 KG
141 cm x 150 cm x 125 cm

CH-D02

LEG FLEXION

141 KG
188 cm x 180 cm x 90 cm

CH-D55

UNILATERAL LEG CURL

139 KG
193 cm x 114 cm x 93 cm

CH-D46

EXTENSION - FLEXION III

105 KG
105 cm x 130 cm x 120 cm

CH-D43

SISSY SQUAT

33 KG
99 cm x 73 cm x 50 cm

CH-D05

SEATED CALF 3.0

79 KG
150 cm x 67 cm x 90 cm

CH-D07

LEG PRESS

208 KG
220 cm x 112 cm x 157 cm

CH-D09

HACK SQUAT

229 KG
225 cm x 115 cm x 140 cm

CH-D44

LEVERAGE LEG PRESS

225 KG
200 cm x 153 cm x 147 cm

Designed for the most demanding users, the Unilateral Leg Curl works the hamstrings, safeguarding the lower back thanks to the ergonomic incline of the pad..

UNILATERAL LEG CURL

NATURAL MOTION CURVE

ENHANCED BIOMECHANICS

Angled torso support for comfort even under heavy loads.

ERGONOMIC DESIGN

handgrip

6 level adjustable roller for reduced stress on the knee

Heavy - duty steel frame

Adjustable zero position

PLATE LOADED

MINIMIZES LOWER-BACK STRESS

Unilateral Leg Curl minimizes strain on your joints and ensures proper alignment, reducing the chance of injury during hamstring exercises

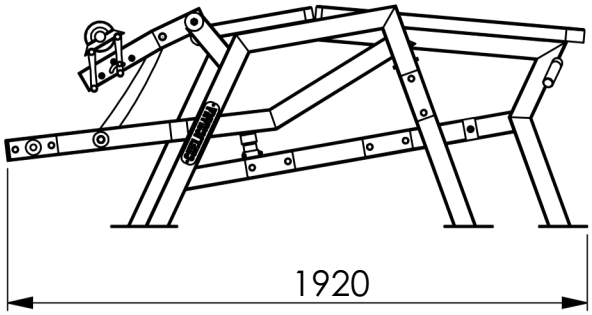

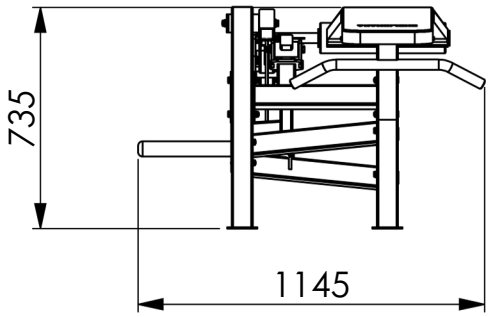

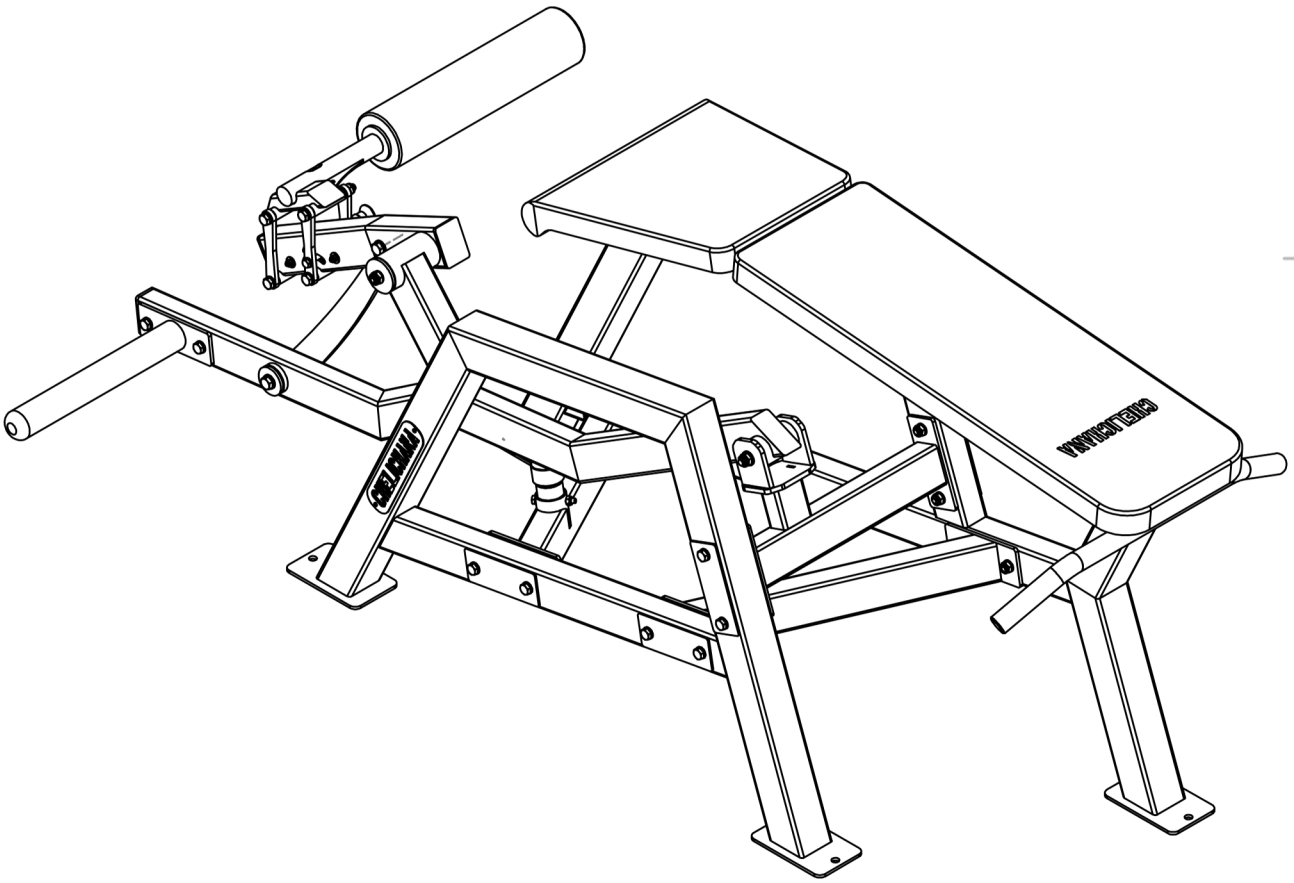

COMPANY:

CHELICHANA

PRODUCT:

D55 Unilateral leg curl

A4

SHEET 1 OF 1

CH-D13

STANDING LEG CURL 2.0

50 KG
93 cm x 94 cm x 110 cm

CH-D45

SUPER SQUAT

189 KG
212 cm x 145 cm x 166 cm

CH-D33

PENDULUM SQUAT

189 KG
235 cm x 188 cm x 120 cm

CH-D15

REVERSE HYPEREXTENSION

97 KG
140 cm x 95 cm x 130 cm

CH-D14

GLUTE - HAM DEVELOPER 2.5

95 KG
168 cm x 110 cm x 118 cm

CH-D30

HYPER GHD

149 KG
215 cm x 93 cm x 147 cm

CH-D16

FLOOR GHD

46 KG
127 cm x 53 cm x 70 cm

CH-D17

SINGLE LEG SQUAT STAND

24 KG
54 cm x 61 cm x 63 cm

CH-D52

GLUTE BRIDGE

140 KG
182 cm x 141 cm x 73 cm

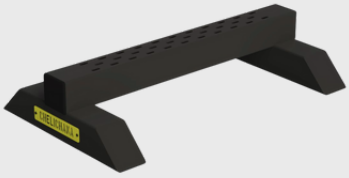

CH-D18

CALF BLOCK

6.4 KG
64 cm x 40 cm x 14 cm

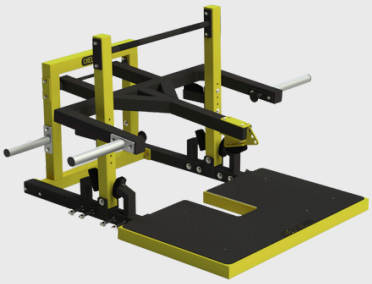

CH-D35

BELT SQUAT

149 KG
162 cm x 193 cm x 119 cm

CH-D41

BELT SQUAT 2.0

101 KG
171 cm x 100 cm x 103 cm

CH-D24

GLUTE BUILDER

109 KG
225 cm x 152 cm x 40 cm

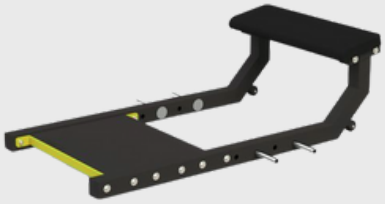

CH-D23

HIP THRUSTER 2.0

49 KG
149 cm x 78 cm x 43 cm

CH-D20

MINI SLED

17 KG
80 cm x 54 cm x 41 cm

CH-D19

DOG SLED

45 KG
103 cm x 98 cm x 61 cm

CH-D21

PROWLER

39 KG
124 cm x 105 cm x 112 cm

CH-D22

YOKE 2.0

82 KG
179 cm x 127 cm x 242 cm

The **Glute Bridge** gives you the full benefits of the hip thrust exercise, simply, safely, and with biomechanically optimised weight curve .

EASY ENTRY

ERGONOMIC DESIGN

ANTI–SLIP GRIP

GLUTE BRIDGE

Adjustable backrest

Smartly isolates your glutes

Adjustable position

The pull-pin quick lock and release mechanism simplifies the workout process .

Safety handbrake

waist cushions provide the safest and most comfortable hip training experience

Biomechanically optimized

Oversized angled foot platform to accommodate users of all sizes

Multiple color options

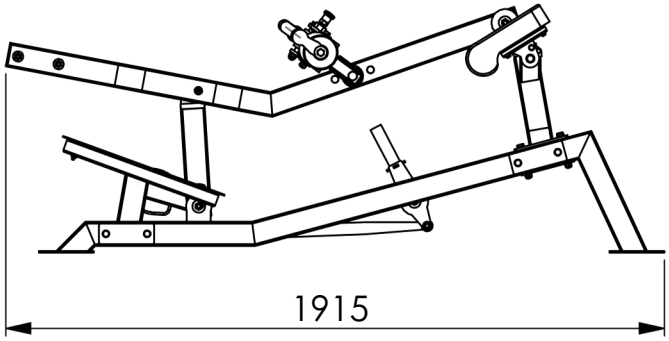

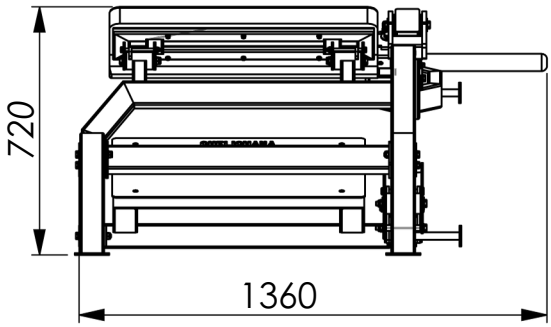

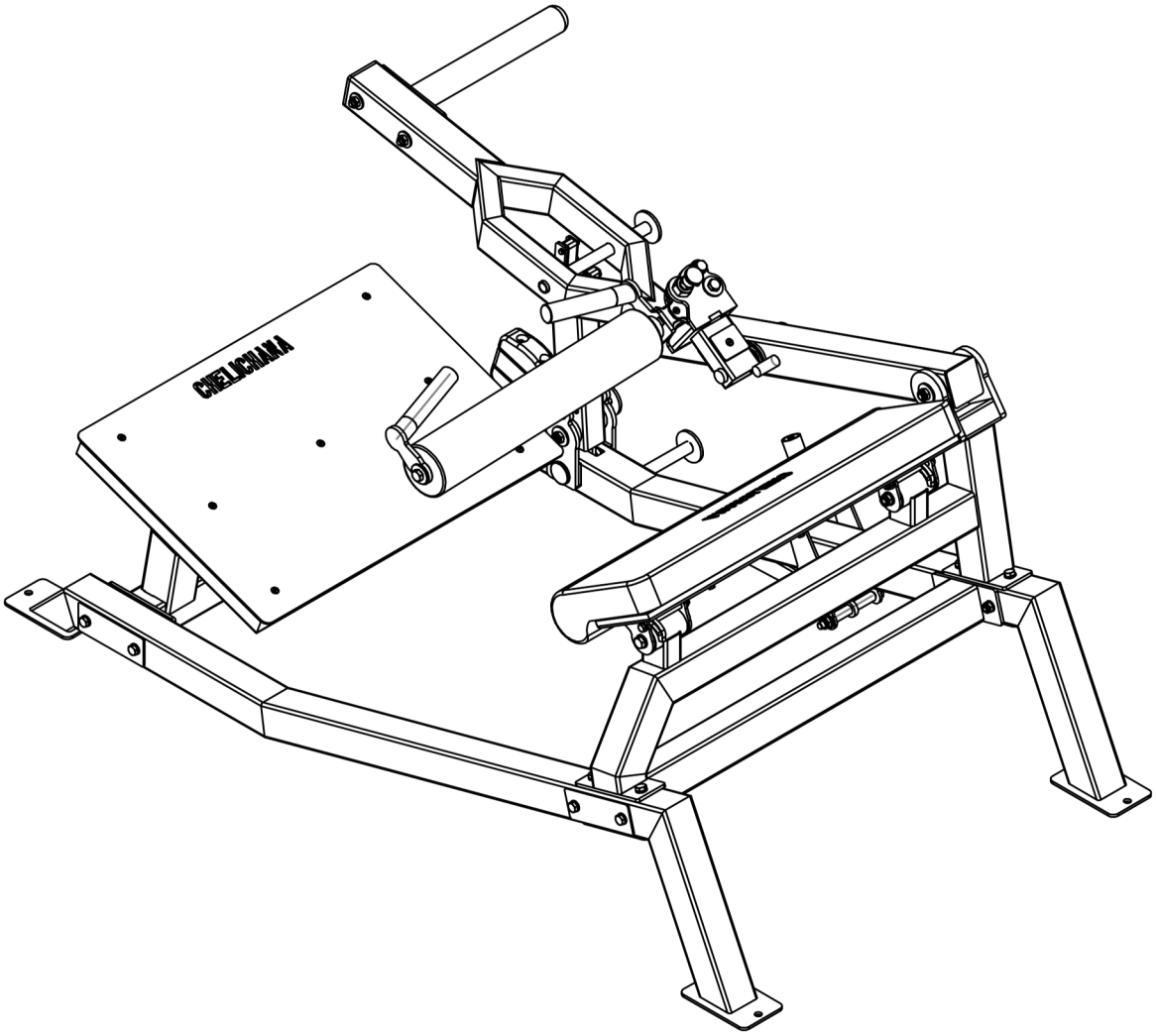

COMPANY:

CHELICHANA

PRODUCT:

D52 Glute Bridge

A4

SHEET 1 OF 1

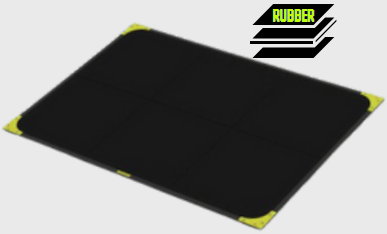

CH-D25

DL PLATFORM 3X2M R

149 KG
210 cm x 310 cm x 3 cm

CH-D35

DL PLATFORM 3X2M R+W

129 KG
210 cm x 310 cm x 3 cm

CH-D27

DL PLATFORM 2.5X1M R

70 kg
110 cm x 260 cm x 3 cm

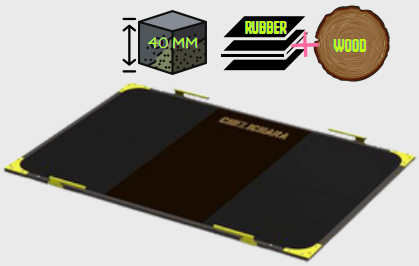

CH-D36

PREMIUM PLATFORM 40MM

219 KG
210 cm x 310 cm x 8 cm

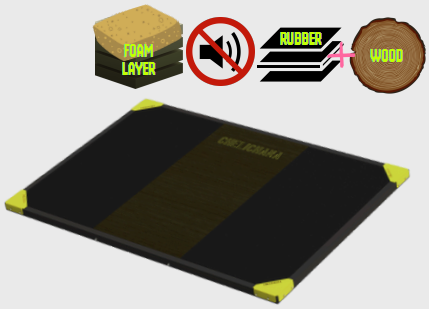

CH-D53

SVR PLATFORM 80MM

430 KG
213 cm x 313 cm x 8 cm

CH-D28

STEP UP PLATFORM ADJUSTABLE

19 KG
44 cm x 44 cm x 42 cm

CH-D39

BOX SET

94 KG
67 cm x 67 cm x 90 cm

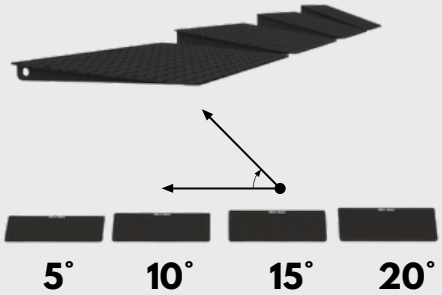

CH-D40

SQUAT RAMP SET

19 KG
76 cm x 31 cm x 9 cm

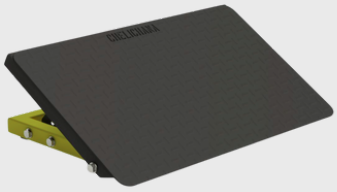

CH-D48

SQUAT WEDGE

19 KG
76 cm x 31 cm x 9 cm

STOP SETTLING FOR A WEAK, UNDERDEVELOPED UPPER BODY. EXPLORE OUR UPPER BODY MACHINES AND BUILD POWERFUL PHYSIQUE YOU'VE ALWAYS WANTED.

CH-G31

CROSSTRAINER 2.5

464 KG
110 cm x 215 cm x 237 cm

CH-G37

LAT & PULLEY PLATE-LOADED 2.0

89 KG
145 cm x 110 cm x 233 cm

CH-G27

LAT & PULLEY 2.0

199 KG
159 cm x 111 cm x 233 cm

CH-G01

DUAL CABLE LAT MACHINE

210 KG
131 cm x 111 cm x 230 cm

CH-G02

DUAL CABLE PULLEY

224 KG
237 cm x 111 cm x 230 cm

CH-G14

ADJUSTABLE PULLEY 2.5

209 KG
116 cm x 78 cm x 237 cm

CH-G08

SEATED CHEST PRESS

161 KG
200 cm x 186 cm x 113 cm

CH-G07

SEATED ROW

119 KG
141 cm x 143 cm x 109 cm

CH-G04

CHEST SUPPORTED T-BAR ROW

70 KG
191 cm x 112 cm x 126 cm

It provides a stable and supported platform for performing a rowing motion while keeping your back straight and core engaged.

CHEST SUPPORTED T-BAR ROW

ERGONOMIC DESIGN

ANTI-SLIP GRIP

360 degree rotation technology to minimize the stress put on the connective tissue within the wrists, shoulders, and elbows

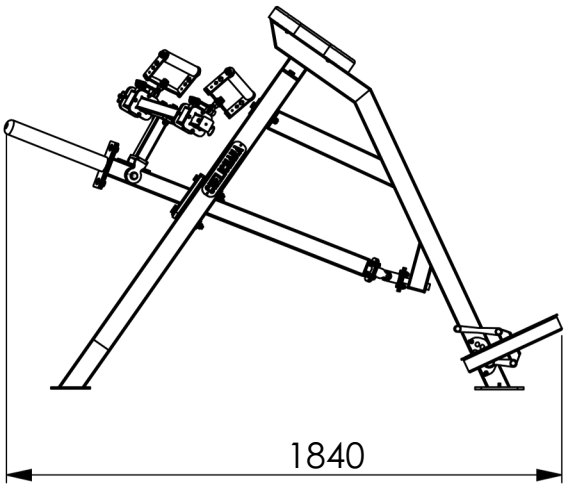

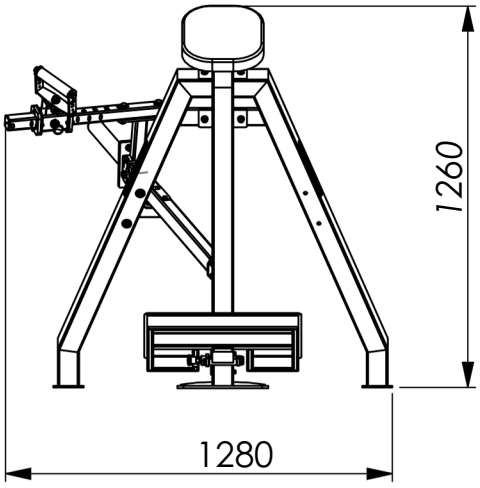

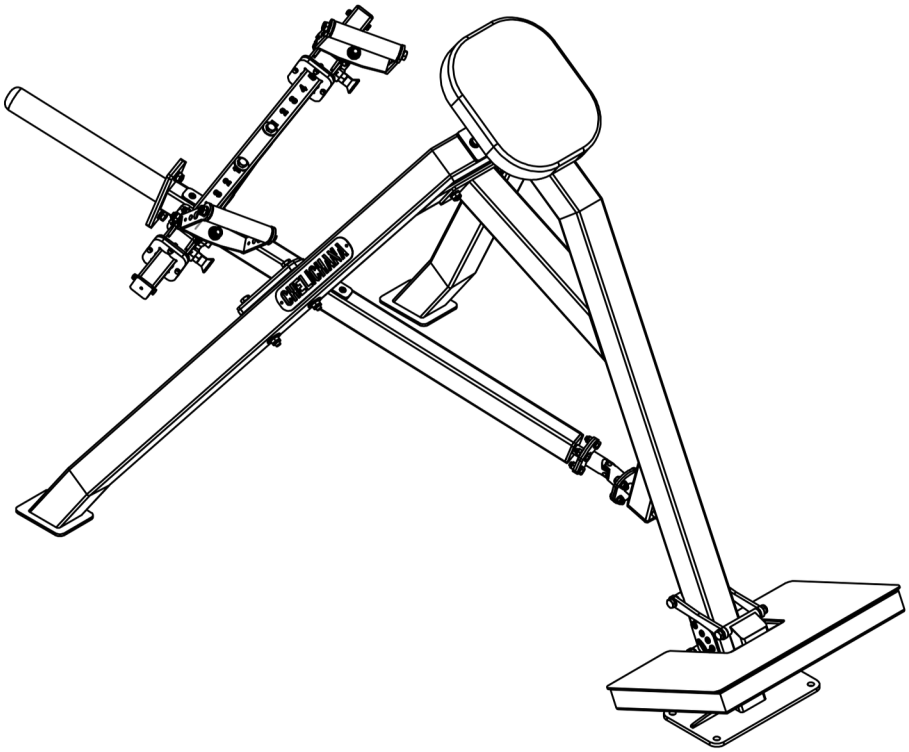

COMPANY:

CHELICHANA

PRODUCT:

G04 Chest Supported T-Bar Row

A4

SHEET 1 OF 1

CH-G05

POWER TOWER

73 KG
143 cm x 65 cm x 247 cm

CH-G06

LEG RAISE - DIPS

56 KG
143 cm x 65 cm x 145 cm

CH-G17

STANDING DIPS

59 KG
138 cm x 89 cm x 133 cm

CH-G21

PARALLETTE

13 KG
39 cm x 61 cm x 36 cm

CH-G20

TRICEPS KICKBACK

79 KG
111 cm x 70 cm x 120 cm

CH-G16

HYPEREXTENSION 2.5

61 KG
169 cm x 91 cm x 89 cm

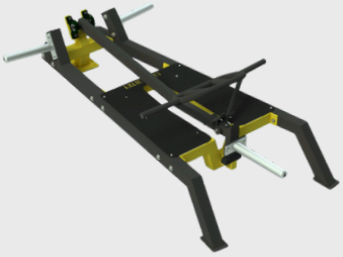

CH-G15

T - BAR 2.0

89 KG
192 cm x 112 cm x 53 cm

CH-G38

SCOTT CURL

190 KG
100 cm x 90 cm x 165 cm

CH-G32

POWER TOWER ASSISTED

229KG
140 cm x 70 cm x 240 cm

CH-G19

SMITH MACHINE 2.5

129 kg
143 cm x 200 cm x 222 cm

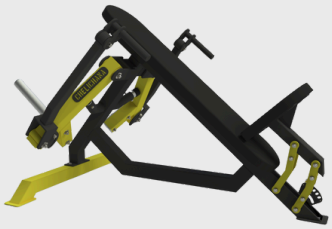

CH-G12

CHEST FLY

95 kg
149 cm x 135cm x 110 cm

Versatile and durable machine that can help you perfect your chin-ups, dips, and more

ASSISTED POWER TOWER

COMFORTABLE PADDING

Dual-function design for both chin-ups and dips

Counterbalancing system

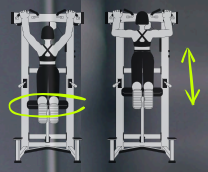

Adjustable weight stack for customizable resistance

Space-saving design for easy integration into your gym or home

ANTI-SLIP GRIP

70 KG

BUILDS STRENGTH PROGRESSIVELY

- ADJUSTABLE WEIGHT ASSISTANCE TO CATER TO VARIOUS FITNESS LEVELS
- MULTIPLE GRIP POSITIONS FOR ADDED VERSATILITY
- HEAVY-DUTY STEEL FRAME FOR MAXIMUM STABILITY
- FOLDABLE KNEEPADS GIVE THE OPTION FOR UNASSISTED TRAINING

CH-G29

ADJUSTABLE CABLE - PLATE LOADED

79 KG
116 cm x 79 cm x 221 cm

CH-G22

CABLE ATTACHMENTS - SET

11 KG
120 cm x 15 cm x 26 cm

CH-G22A

LAT PULL ATTACHMENT

3 KG
120 cm x 15 cm x 3 cm

CH-G22B

ROWING CABLE ATTACHMENT

3 KG
69 cm x 17 cm x 7 cm

CH-G22C

PARALLEL GRIP ATTACHMENT

2 KG
25 cm x 17 cm x 16 cm

CH-G22D

ONE HANDED CABLE ATTACHMENT

1 KG
17 cm x 4 cm x 17 cm

CH-G22H

MULTIGRIP ATTACHMENT

6 KG
87 cm x 17 cm x 14 cm

CH-G22E

STRAIGHT CABLE ATTACHMENT

2 KG
46 cm x 4 cm x 7 cm

CH-G22K

CABLE ATTACHMENT - EZ

4 KG
74 cm x 3 cm x 15 cm

CH-G22F

V CABLE ATTACHMENT

2 KG
35 cm x 7 cm x 26 cm

CH-G22P

CANNONBALL CABLE ATTACHMENT

0,4 kg
4cm x 9 cm x 4 cm

CH-G22O

DOGBONE CABLE ATTACHMENT

1,5 KG
44 cm x 7 cm x 7 cm

CH-G23

TUBE CABLE ATTACHMENT

3 KG
4,5 x 21 x 4,5 cm

CH-G33

DEADLIFT JACK

10 KG
44 cm x 110 cm x 80 cm

CH-G23

MINI DEADLIFT JACK

3 KG
12 cm x 41 cm x 27 cm

MULTIFUNCTIONAL ADD ONS AND OPTIONS WITH POSSIBILITY TO TRAIN SIMULTANEOUSLY UP TO 8 PEOPLE

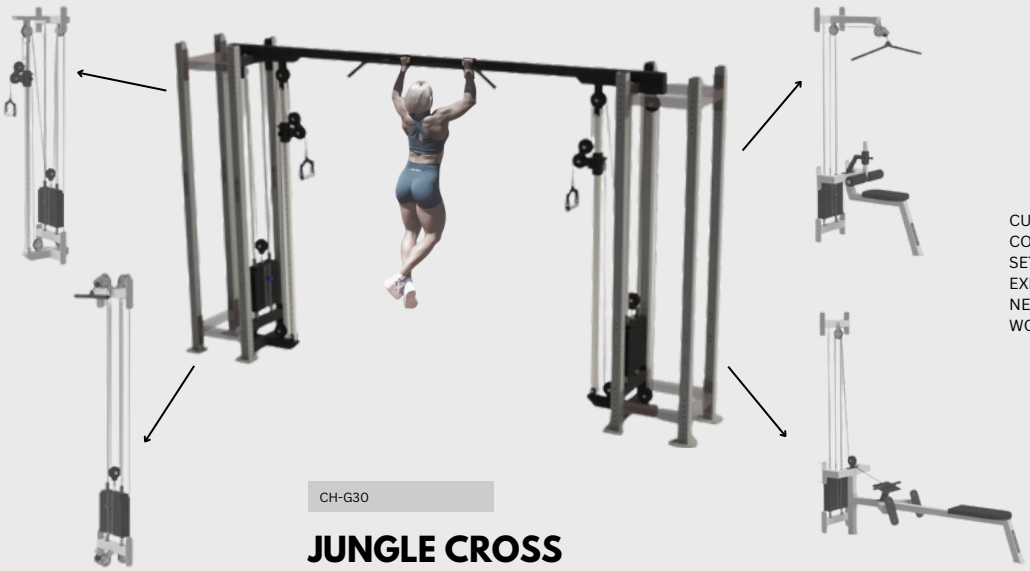

CUSTOM CONFIGURATIONS AND SETUPS TO PROVIDE EXERCISERS WITH NEARLY LIMITLESS WORKOUT VARIETY

CH-G30

JUNGLE CROSS

492 KG
425 cm x 70 cm x 248 cm

Designed for improving abdominal, back and other core muscles.

HYPEREXTENSION

comfortable ergonomic design

45 degree angle

6 level adjustable height

STURDY STABLE CONSTRUCTION

Space-saving design for easy integration into your gym or home

70 KG

BUILDS STRENGTH PROGRESSIVELY

- ADJUSTABLE WEIGHT ASSISTANCE TO CATER TO VARIOUS FITNESS LEVELS
- MULTIPLE GRIP POSITIONS FOR ADDED VERSATILITY
- HEAVY-DUTY STEEL FRAME FOR MAXIMUM STABILITY
- FOLDABLE KNEEPADS GIVE THE OPTION FOR UNASSISTED TRAINING

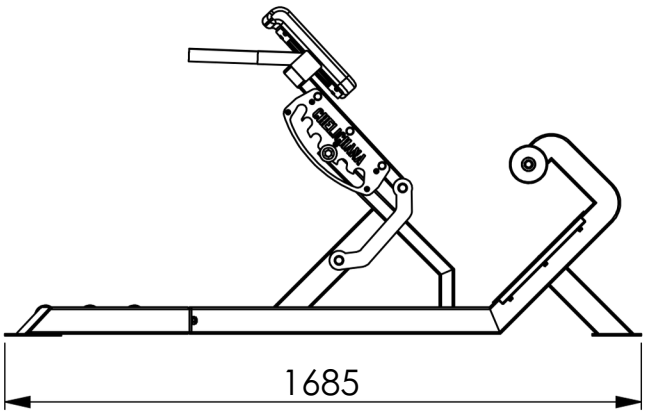

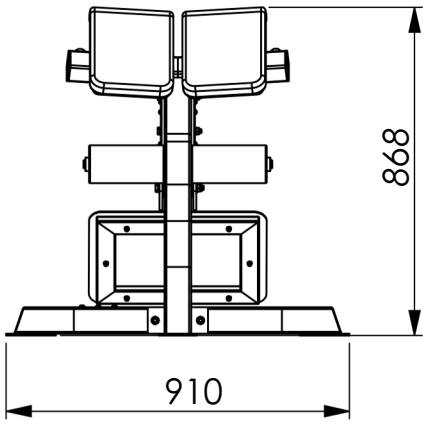

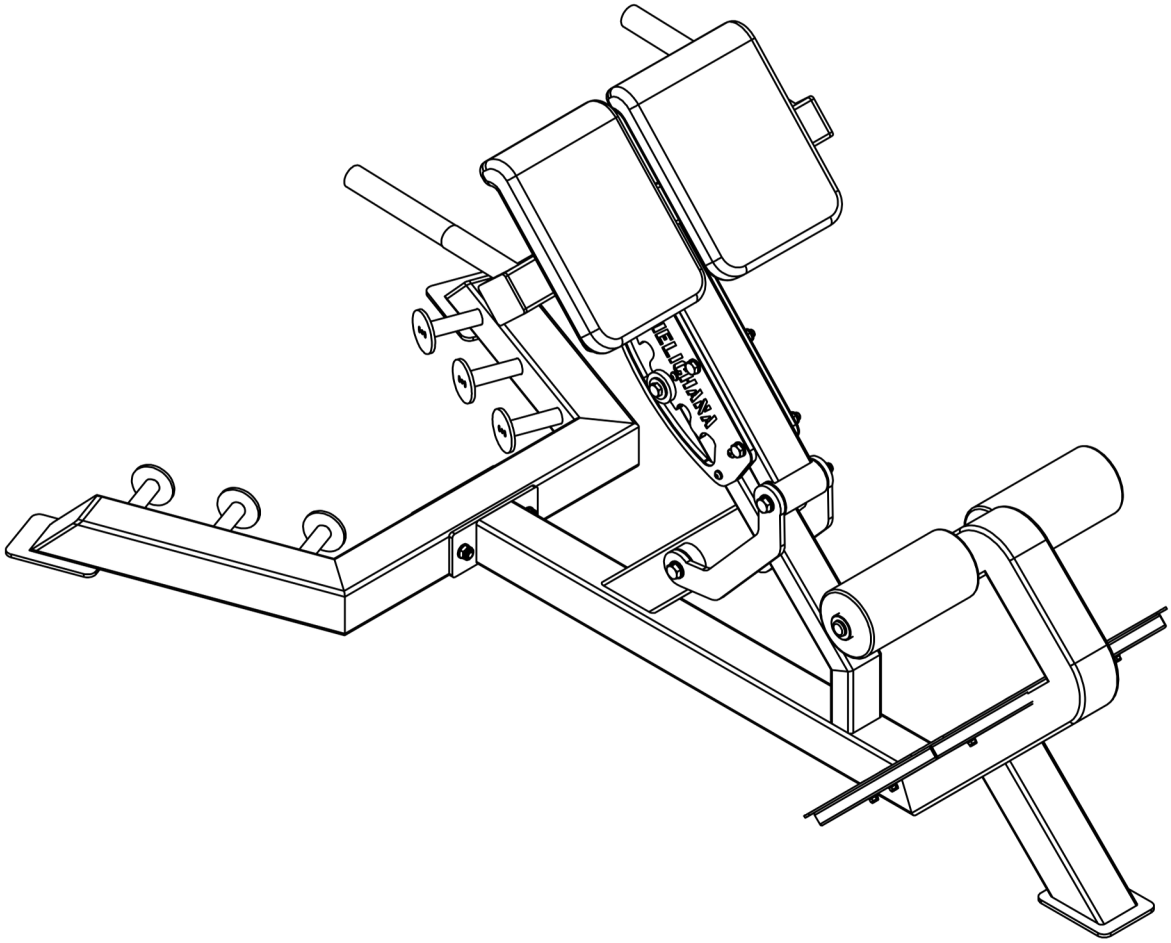

COMPANY:

CHELICHANA

PRODUCT:

G16 Hyperextension

A4

SHEET 1 OF 1

CH-B02

FLAT BENCH

19 KG
130 cm x 78 cm x 45 cm

CH-B03

VERTICAL BENCH

20 KG
73 cm x 59 cm x 94 cm

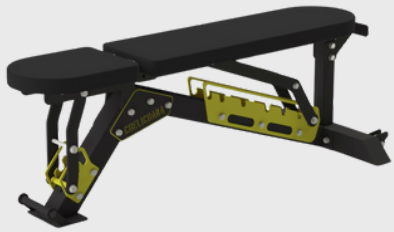

CH-B17

ADJUSTABLE BENCH 3.0

42 KG
131 cm x 57 cm x 45 cm

CH-B04

MINI BENCH

12 KG
52 cm x 44 cm x 45 cm

CH-B05

SCOTT BENCH

59 KG
90 cm x 99 cm x 102 cm

CH-B06

AB BENCH

39 KG
136 cm x 75 cm x 76 cm

CH-B07

DECLINE ADJUSTABLE BENCH

59 KG
148 cm x 80 cm x 70 cm

CH-B08

BENCH PRESS - FLAT

75 kg
174 cm x 124 cm x 135 cm

CH-B09

INCLINE BENCH PRESS 2.0

79 KG
145 cm x 124 cm x 143 cm

A versatile and robust addition to any home gym, designed to meet all your fitness needs. Whether you're performing dumbbell presses, seated curls, or any other strength training exercises, this bench offers exceptional stability and comfort.

MULTIPLE COLOR OPTIONS

ADJUSTABLE BENCH

Space-saving design

only 30mm gap

7 level foldable backrest

3 level adjustable seat position

custom logo stitching

ADDED WHEELS AND TRANSPORT HANDLE FOR EASY MANOEUVRABILITY

COMFORTABLE AND ERGONOMIC

The closed ladder design keeps the ladder securely in place when adjusting the bench and when storing it vertically..

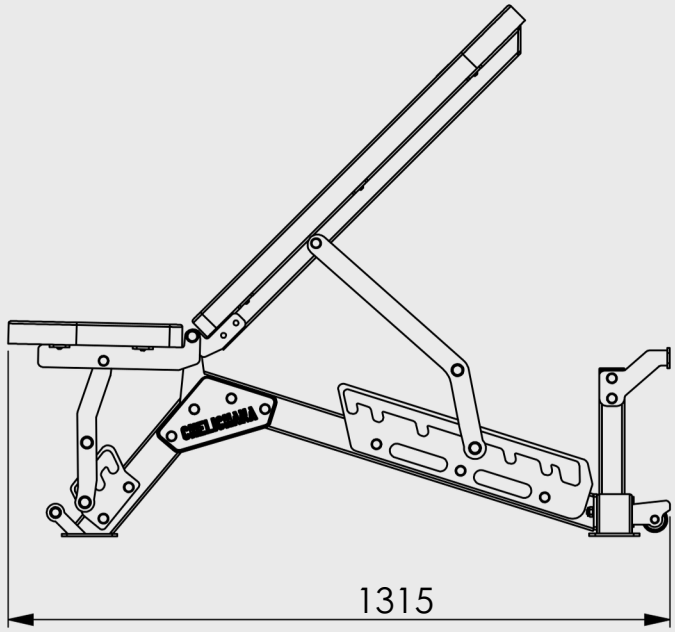

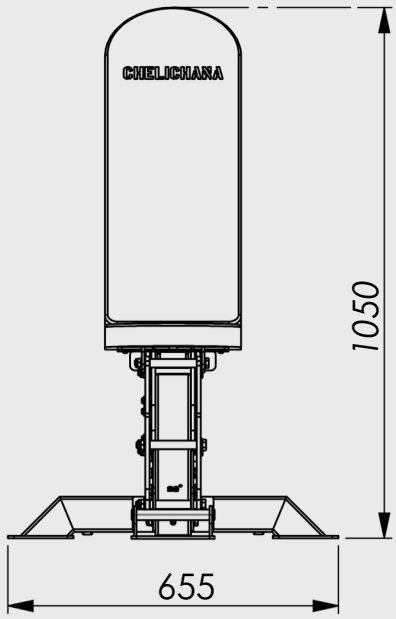

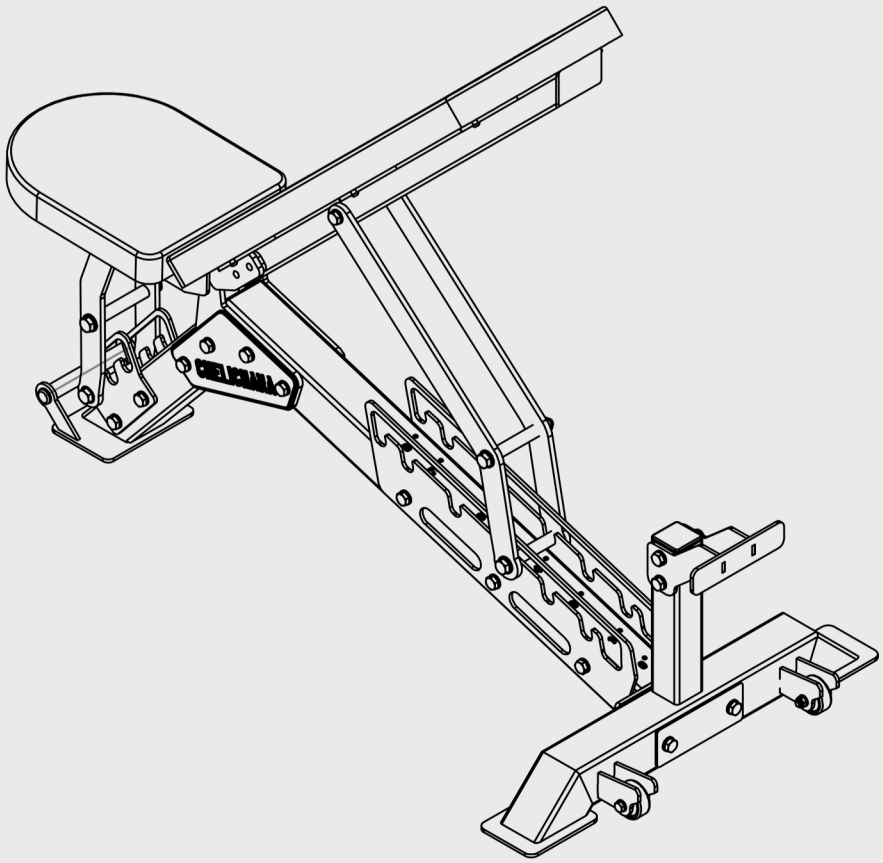

COMPANY:

CHELICHANA

PRODUCT:

B17 Adjustable Bench

CH-B10

DECLINE BENCH PRESS

89 KG
182 cm x 124 cm x 129 cm

CH-B12

VERTICAL BENCH PRESS

71 KG
113 cm x 124 cm x 149 cm

CH-B16

BENCH PRESS - COMPETITION

84 KG
137 cm x 127 cm x 100 cm

CH-B14

BENCH PRESS - UNIVERSAL

89 KG
166 cm x 125 cm x 145 cm

CH-B19

ROW BENCH

42 KG
127 cm x 135 cm x 92 cm

CH-B13

COMBO BENCH

139 KG
167 cm x 202 cm x 175 cm

CH-K01

ADJUSTABLE STANDS

25 KG
65 cm x 55 cm x 120 cm

CH-K02

MINI RACK

50 KG
121 cm x 122 cm x 175 cm

CH-K03

MEDIUM RACK

61 KG
122 cm x 122 cm x 239 cm

CH-K04

POWER RACK

99 KG
94 cm x 122 cm x 233 cm

CH-K05

POWER CAGE

115 KG
142 cm x 122 cm x 239 cm

CH-K06

HALF RACK

105 KG
150 cm x 182 cm x 239 cm

CH-K07

FOLDABLE RACK

57 KG
61 cm x 122 cm x 233 cm

CH-K08

MONSTER RACK

166 KG
168 cm x 185 cm x 233 cm

CH-K09

DOUBLE POWER CAGE

193 KG
283 cm x 185 cm x 239 cm

Perfect for both home gyms and commercial spaces, our power cage provide a stable and secure foundation for your weightlifting routine.

POWER CAGE

DESIGNED TO BE CUSTOMISED

multiple grip options

You can easily add attachments to expand your range of exercises, whether it's for dips, pull-ups, or landmine workouts.

custom nameplate logo

J-cups included

multiple laser-cut, numbered holes

with weight storage horns

made from high-grade steel

Our modular designs ensure that your power cage can evolve with your training, offering you the flexibility to grow as your fitness goals change

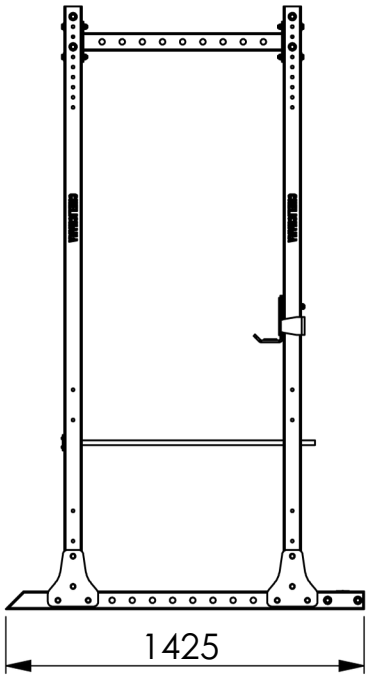

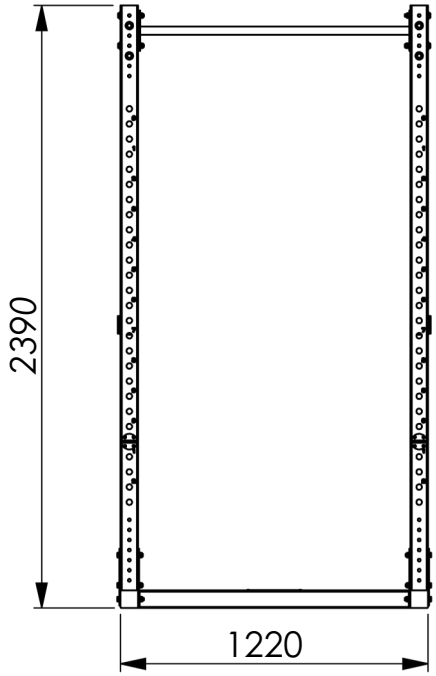

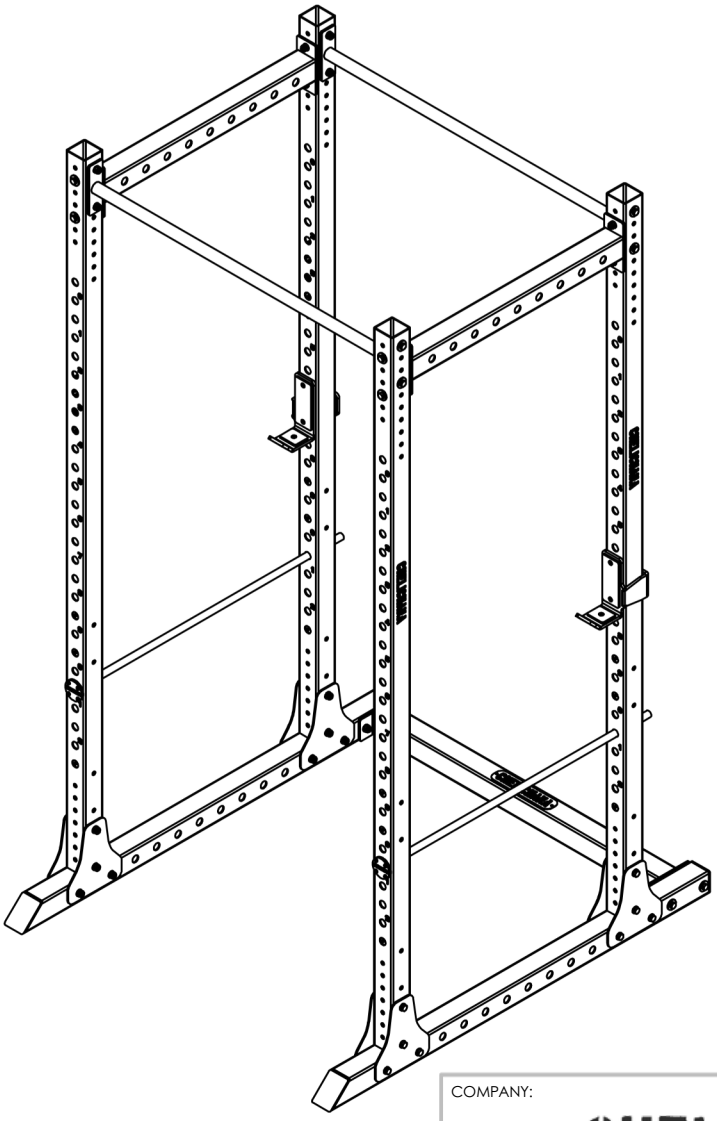

COMPANY:

CHELICHANA

PRODUCT:

K05 Power_Cage

A4

SHEET 1 OF 1

CH-K33

ULTIMATE CAGE

159 KG
142 cm x 122 cm x 239 cm

CH-K10

WALL RACK WR2

49 KG
115 cm x 122 cm x 272 cm

CH-K11

WALL RACK WR3

80 KG
115 cm x 289 cm x 272 cm

CH-K12

WAL RACK WR4

108 KG
115 cm x 404 cm x 272 cm

CH-K13

WALL RACK WR5

139 KG
115 cm x 571 cm x 272 cm

CH-K14

WALL RACK WR6

169 KG
115 cm x 686 cm x 272 cm

CH-K15

SELF STANDING RACK

93 KG
122 cm x 122 cm x 272 cm

CH-K16

SELF STANDING RACK SR6

141 KG
122 cm x 289 cm x 272 cm

CH-K17

SELF STANDING RACK SR8

195 KG
122 cm x 404 cm x 272 cm

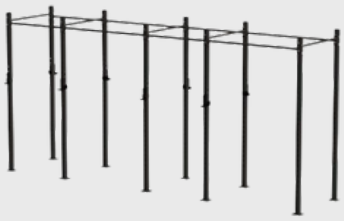

CH-K18

SELF STANDING RACK SR10

245 KG
122 cm x 571 cm x 272 cm

CH-K19

SELF STANDING RACK SR12

298 KG
122 cm x 686 cm x 272 cm

CH-K29

GORILLA RACK

449 KG
747 cm x 122 cm x 272 cm

CH-K30

COMPETITON RIG

494 KG
413 cm x 131 cm x 372 cm

OPTIMIZE YOUR WORKOUT SPACE WITH CAGE ATTACHMENTS. OUR VERSATILE ATTACHMENTS ARE DESIGNED AS AN UPGRADE TO YOUR EXISTING EQUIPMENT, ALLOWING YOU TO TAILOR YOUR WORKOUTS TO MEET YOUR SPECIFIC GOALS. FROM DIP BARS TO SAFETY ARMS, CHELICHANA CAGE ACCESSORIES PROVIDE THE TOOLS YOU NEED TO PUSH YOUR LIMITS SAFELY AND EFFECTIVELY.

CAGE ATTACHMENTS

CAGE ATTACHMENTS

CH-A01

J CUPS

5 KG
18 cm x 8 cm x 19 cm

CH-A02

MONSTER CUPS

6 KG
18 cm x 8 cm x 19 cm

CH-A03

DIPS 2.0

8 KG
82 cm x 59 cm x 23 cm

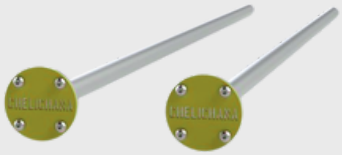

CH-A05

SAFETY BARS

6 KG
110 cm x 6 cm x 6 cm

CH-A08

SAFETY STRAPS

4 KG
115 cm x 15 cm x 15 cm

CH-A04

NECK TRAINER

8 KG
82 cm x 59 cm x 23 cm

CH-A06

SAFETY PROFILES

16 KG
93 cm x 8 cm x 20 cm

CH-A07

SPOTTER ARMS 2.0

17 KG
69 cm x 8 cm x 30 cm

CH-A09

BAND PINS

1 KG
20 cm x 6 cm x 6 cm

CH-A17

PLATES STORAGE BEHIND THE RACK

16 KG
43 cm x 49 cm x 40 cm

CH-A11

WALLBALL TARGET

9 KG
77 cm x 10 cm x 35 cm

CH-A12

BELT SQUAT ATTACHMENT

20 KG
129 cm x 80 cm x 40 cm

CH-A13

MONOLIFT ATTACHMENT

18 KG
60 cm x 35 cm x 16 cm

CH-A17

GRIP BALL

2 KG
16 cm x 8 cm x 12 cm

CH-A19

VERTICAL BARBELL HOLDER

2 KG
10 cm x 6 cm x 31 cm

CH-A20

LANDMINE 2.0

3 KG
10 cm x 30 cm x 16 cm

CH-A21

SELF-ALIGNING LND HANDLE

4 KG
20 cm x 20 cm x 22 cm

CH-A22

NARROW GRIP LND HANDLE

4 KG
21 cm x 29 cm x 25 cm

CH-A23

SINGLE HAND LND HANDLE

1 KG
22 cm x 6 cm x 20 cm

CH-A24

WIDE GRIP LND HANDLE

3 KG
87 cm x 12 cm x 7 cm

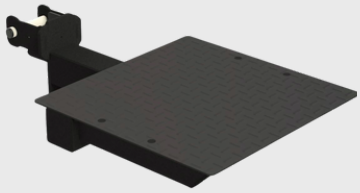

CH-A25

STEP UP PLATFORM

14 KG
69 cm x 43 cm x 23 cm

CH-A26

MULTIGRIP CHIN-UP CROSSMEMBER

12 KG
24 cm x 118 cm x 21 cm

CH-A28

ROLLER PAD

6 KG
50 cm x 10 cm x 20 cm

CH-A29

NAMEPLATE CROSSMEMBER

13 KG
108 cm x 7 cm x 36 cm

CH-A30

GRIP BALL M20

1 KG
7 cm x 7 cm x 16 cm

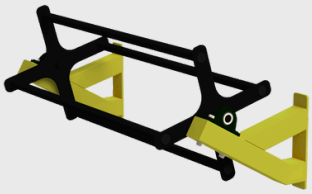

CH-A32

REVOLVING PULL UP BAR

26 KG
55 cm x 122 cm x 57 cm

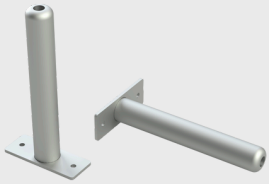

CH-A33

PLATE HORNS

3 KG
6 cm x 16 cm x 35 cm

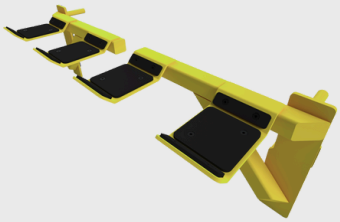

CH-A34

DUMBELL HOLDERS

15 KG
32 cm x 45 cm x 31 cm

CH-A35

RACK FIXING ATTACHMENT

6 KG
7 cm x 108 cm x 10 cm

CH-A36

RING + ROPE RACK EXTENSION

9 KG
110 cm x 24 cm x 7 cm

CH-A37

SHACKLE

1 KG
7 cm x 8 cm x 17 cm

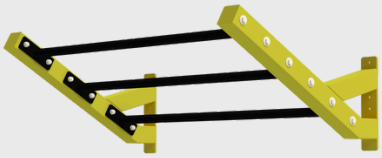

CH-A38

RACK WING

26 KG
63 cm x 122 cm x 46 cm

CH-A40

ROLLER CUPS

5 KG
17 cm x 9 cm x 22 cm

CH-A41

JAMMER ARMS 2

35 KG
104 cm x 72 cm x 30 cm

CH-A42

RACK WEIGHT - VERTICAL

4 KG
35 cm x 15 cm x 8 cm

CH-A47

HIPTHRUST ATTACHMENT

5 KG
133 cm x 23 cm x 11 cm

OUR STORAGES HELP YOU KEEP ALL OF YOUR WEIGHTS AND OTHER FITNESS EQUIPMENT ORGANIZED AND ACCESSIBLE. WITH A STORAGE, YOU CAN HAVE EVERYTHING YOU NEED FOR YOUR WORKOUT LAID OUT AND EASILY ACCESSIBLE, WHICH MAKES IT MUCH EASIER TO STAY ON TOP OF YOUR FITNESS ROUTINE.

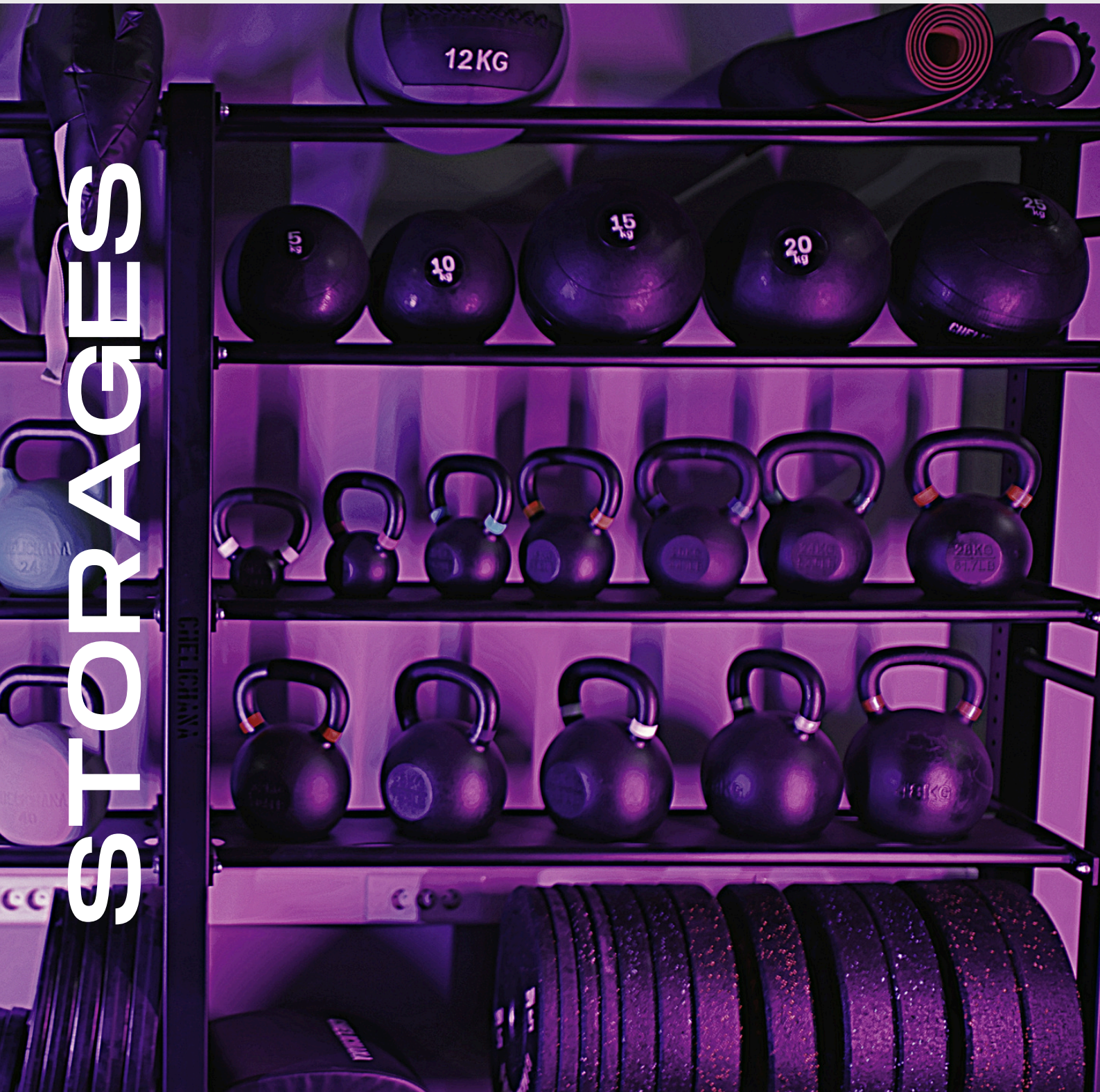

STORAGES

CH-S01

WEIGHT TREE

32 KG
67 cm x 66 cm x 135 cm

CH-S02

BUMPER STACKER

19 KG
138 cm x 41 cm x 33 cm

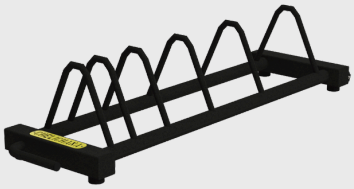

CH-S03

BUMPER CART

19 KG
146 cm x 41 cm x 33 cm

CH-S04

WALL MOUNTED WEIGHT TREE

15 KG
52 cm x 16 cm x 139 cm

CH-S05

WEIGHT TREE - ONE SIDED

22 KG
45 cm x 62 cm x 133 cm

CH-S06

HEX DUMBELL STORAGE

79 KG
71 cm x 135 cm x 83 cm

CH-S08

UNIVERSAL STORAGE

35 KG
54 cm x 122 cm x 132 cm

CH-S09

KETTLEBELL STORAGE

69 KG
71 cm x 138 cm x 80 cm

CH-S11

BARBELL STORAGE (FLOOR)

19 KG
52 cm x 80 cm x 36 cm

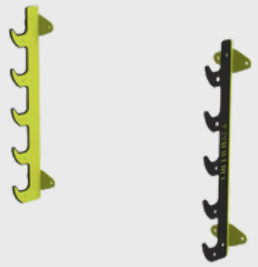

CH-S12

BARBELL STORAGE (WALL MOUNTED)

7 KG
15 cm x 16 cm x 75 cm

CH-S13

CHIN UP

8 KG
45 cm x 119 cm x 44 cm

CH-S14

PULL UP

16 KG
83 cm x 114 cm x 69 cm

CH-S15

CEILING PULL UP

13 KG
61 cm x 116 cm x 64 cm

CH-S16

MONKEY BAR

68 KG
463 cm x 75 cm x 50 cm

CH-S17

SWEDISH LADDER

75 KG
43 cm x 132 cm x 246 cm

CH-S18

BOXING BAG HANGER

13 KG
100 cm x 83 cm x 53 cm

CH-S19

CEILING BRACKET

1 KG
20 cm x 20 cm x 6 cm

CH-S21

HEX DUMBELL 1-10 KG STORAGE

38 KG
73 cm x 44 cm x 120 cm

CH-S22

CEILING MOUNTED RING HANGER

5 KG
7 cm x 90 cm x 9 cm

CH-S24

CONCRETE BEAM MOUNTED CHIN UP

5.3 KG
3 cm x 119 cm x 53 cm

CH-S25

MINI PULL UP

9 KG
40 cm x 100 cm x 36 cm

CH-S26

WALLBALL STORAGE

14 KG
47 cm x 116 cm x 36 cm

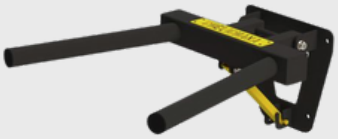

CH-S27

DIPS FOLDABLE (WALL MOUNTED)

12 KG
69 cm x 59 cm x 30 cm

CH-S28

DIPS FIX (WALL MOUNTED)

9 KG
60 cm x 70 cm x 27 cm

CH-S29

WALL MOUNT JUMP ROPE HANGER

2 KG
11 cm x 12 cm x 44 cm

CH-S30

BUMPER LANDMINE

2.4 KG
8 cm x 31 cm x 26 cm

CH-S31

ECCENTRIC WEIGHT RELEASERS

12 KG
32 cm x 13 cm x 78 cm

CH-S32

VERTICAL BARBELL HOLDER

2 KG
11 cm x 33 cm x 7 cm

CH-S34

BARBELL BOX (9PCS)

31 KG
60 cm x 60 cm x 29 cm

WEIGHTS

WHEN WE SAY WEIGHT PLATES, MOST PEOPLE THINK OF ONLY ONE EXERCISE: LIFTING. HOWEVER, IT'S THE SIMPLICITY THAT MAKES A WEIGHT PLATE SUCH A FLEXIBLE PIECE OF EQUIPMENT. AMONG OTHERS, YOU CAN USE IT TO BUILD ENDURANCE, BOOST STRENGTH, AND IMPROVE YOUR BALANCE.

CH-EBSET

ELITE BUMPER PLATE SET

140 KG
45 cm x 45 cm x 3 cm

CH-GUSET155

SEVEN HOLE PLATE SET 155 KG

155 KG
45 cm x 45 cm x 45 cm

CH-CRSET

CRUMBRUBBER BUMPER SET 150KG

150 KG
45 cm x 45 cm x 45 cm

CH-MICR15

MINI WEIGHT PLATES SET 0,5-2,5 KG

15 KG
20 cm x 20 cm x 10 cm

CH-MICU5

MICRO WEIGHT PLATE SET 0,25 -1 KG

5 KG
15 cm x 15 cm x 5 cm

CH-MINU25

CHANGE PLATES 0,5 - 5 KG

25 KG
25 cm x 25 cm x 10 cm

CH-MINU15

CHANGE PLATES 0,5 - 2,5 KG

15 KG
25 cm x 25 cm x 10 cm

CH-S30

TECHNIQUE PLATES 2.5 KG

5 KG
45 cm x 45 cm x 5 cm

CH-S31

TECHNIQUE PLATES 5 KG

10 KG
45 cm x 45 cm x 10 cm

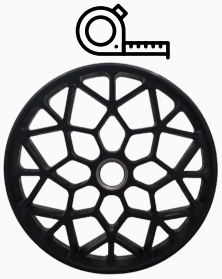

45cm

At a diameter of 450mm, our plates offer the perfect balance between size and weight. The lightweight construction allows you to focus on your form without compromising on durability. By reducing the load, you can work on your pulling technique, refine your bar path, and concentrate on overhead positions with greater precision.

Improve your technique with style

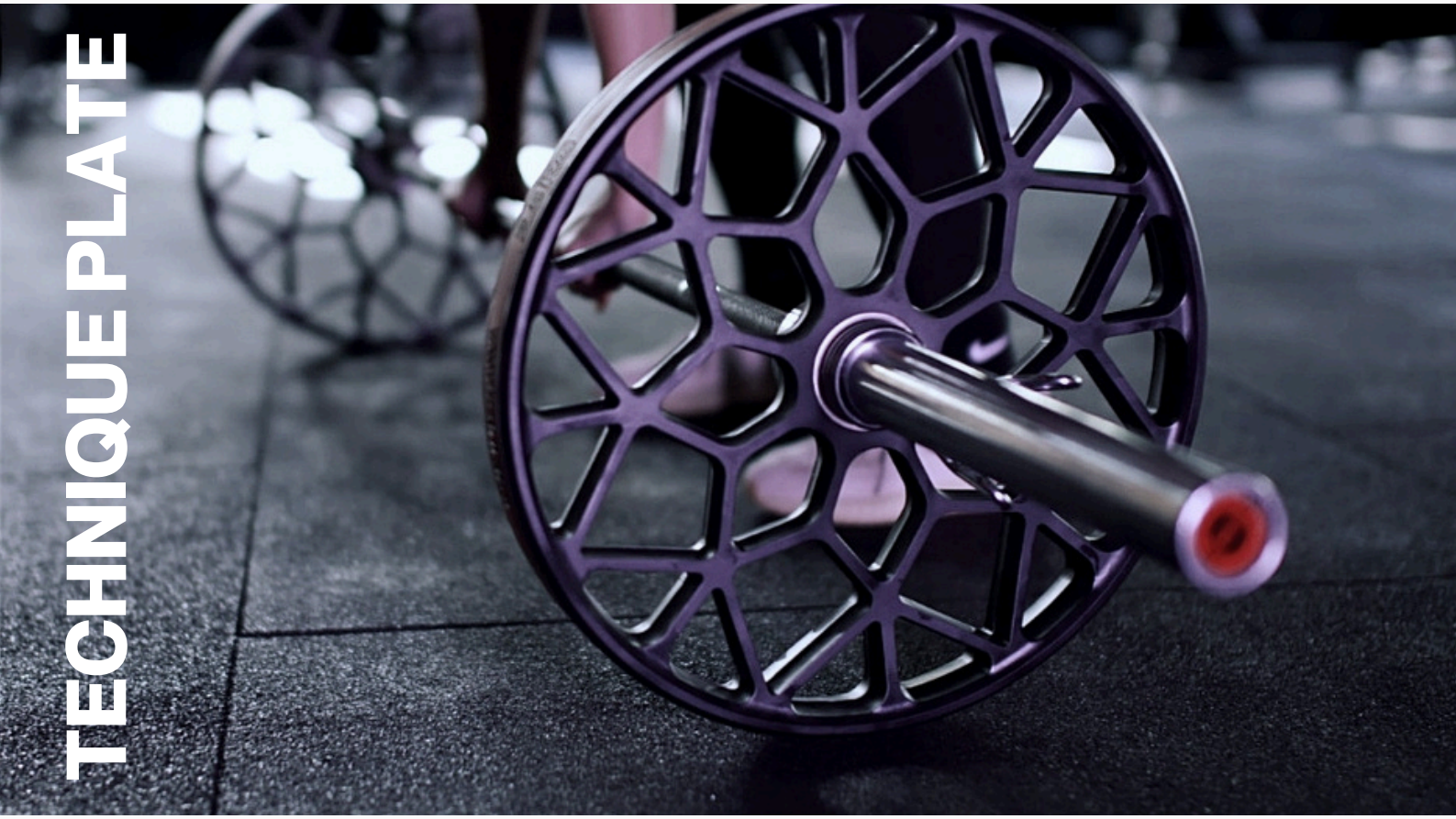

Designed specifically for Olympic weightlifting technique training, these plates are the ultimate choice for achieving technical perfection, preventing injuries, and facilitating rehabilitation.

CH-CR5

CRUMBRUBBER BUMPER 5KG

5 KG
45 cm x 45 cm x 3 cm

CH-CR10

CRUMBRUBBER BUMPER 10KG

10 KG
45 cm x 45 cm x 45 cm

CH-CR15

CRUBRUBBER BUMPER 15KG

15 KG
45 cm x 45 cm x 45 cm

CH-CR20

CRUMBRUBBER BUMPER 20KG

15 KG
20 cm x 20 cm x 10 cm

CH-CR25

CRUMBRUBBER BUMPER 25KG

5 KG
15 cm x 15 cm x 5 cm

CH-PP05

POWERLIFTING PLATE 5KG

5 KG
23 cm x 23 cm x 1.8 cm

CH-PP10

POWERLIFTING PLATE 10KG

10 KG
32.5 cm x 32.5 cm x 1.8 cm

CH-PP15

POWERLIFTING PLATE 15KG

15 KG
45cm x 45cm x 1.8 cm

CH-PP20

POWERLIFTING PLATE 20KG

20 KG
45 cm x 45 cm x 2 cm

CH-PP25

POWERLIFTING PLATE 25KG

25 KG
45 cm x 45 cm x 2.4 cm

CH-PB5

PREMIUM BUMPER 5KG

5 KG
45 cm x 45 cm x 3 cm

CH-PB10

PREMIUM BUMPER 10KG

10 KG
45 cm x 45 cm x 5 cm

CH-PB15

PREMIUM BUMPER 15KG

15 KG
45 X 45 X 8 cm

CH-PB20

PREMIUM BUMPER 20KG

20 KG
45 cm x 45 cm x 11 cm

CH-PB25

PREMIUM BUMPER 25KG

25 KG
45 X 45 X 14 cm

CH-GU2.5

SEVEN-HOLE PLATE 2.5KG

2.5 KG
25 cm x 25 cm x 3 cm

CH-GU5

SEVEN-HOLE PLATE 5KG

5 KG
30 cm x 30 cm x 3 cm

CH-GU10

SEVEN-HOLE PLATE 10KG

10KG
45 cm x 45 cm x 3 cm

CH-GU15

SEVEN-HOLE PLATE 15KG

15 KG
45 cm x 45 cm x 3 cm

CH-GU20

SEVEN-HOLE PLATE 20KG

20 KG
45 cm x 45 cm x 5 cm

CH-GU25

SEVEN-HOLE PLATE 25KG

25 KG
45 cm x 45 cm x 5 cm

THE BARBELL IS AN ESSENTIAL PART OF ANY STRENGTH ROUTINE AND A PILLAR OF ANY HOME GYM. WHETHER YOU'RE DOING BENCH PRESSES, SQUATS, DEADLIFTS, OR CURLS, BARBELLS ARE A CRITICAL TOOL FOR GETTING RESULTS.

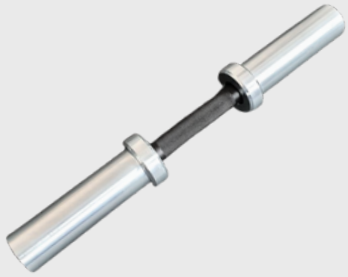

CH-BA0

DUMBELL BARBELL

6 KG
50 cm x 7 cm x 7 cm

CH-BA2A

EZ CURL BAR 120CM

8 KG
120 cm x 8 cm x 8 cm

CH-BA3

SHORT BARBELL

14 KG
180 cm x 8 cm x 8 cm

CH-BA4

ALUMINUM BAR

8 KG
180 cm x 8 cm x 8 cm

CH-BA5

TRAINING BAR BLACK

20 KG
220 cm x 8 cm x 8 cm

CH-BA6

PERFORMANCE BARBELL 15KG

15KG
201 cm x 8 cm x 8 cm

CH-BA7

PERFORMANCE BARBELL 20KG

20 KG
220 cm x 8 cm x 8 cm

CH-BA8

POWER BAR

20 KG
220 cm x 8 cm x 8 cm

CH-BA9

ELITE BARBELL 2.0

20 KG
220 cm x 8 cm x 8 cm

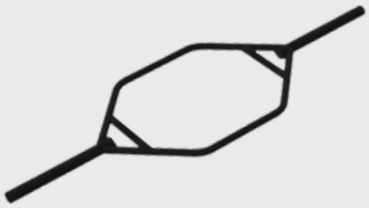

CH-Y01

TRAP BAR SHORT

10 KG
180 cm x 62 cm x 5 cm

CH-Y02

TRAP BAR

15 KG
219 cm x 69 cm x 7 cm

CH-Y03

TRAP BAR 220CM DOUBLE HANDLES

17 KG
220 cm x 69 cm x 14 cm

CH-Y04

TRAP BAR 220 DOUBLE HANDLES ADJUSTABLE

20 KG
220 cm x 72 cm x 36 cm

CH-Y20

OPEN TRAP BAR

20 KG
155 cm x 18 cm x 61 cm

CH-Y05

SWISS BAR

17 KG
220 cm x 27 cm x 7 cm

CH-Y06

FOOTBALL BAR

17 KG
220 cm x 27 cm x 7 cm

CH-Y07

LOG BAR

45 KG
200 cm x 33 cm x 33 cm

CH-Y08

CAMBERED SWISS BAR

17 KG
220 cm x 20 cm x 13 cm

CH-Y22

FOOTBALL PRESS BAR

12 KG
220 cm x 20 cm x 7 cm

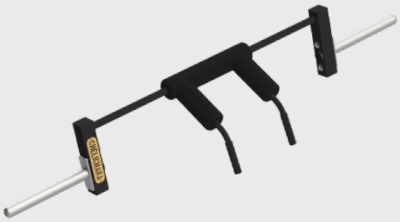

CH-Y10

SAFETY SQUAT BAR 2.5

20 KG
226 cm x 40 cm x 34 cm

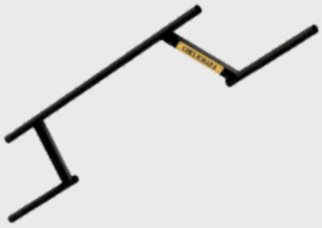

CH-Y11

CAMBERED SQUAT BAR

12 KG
220 cm x 7 cm x 55 cm

CH-Y12

FARMERS WALK

38 KG
169 cm x 41 cm x 12 cm

CH-Y13

FARMERS HANDLES

7 KG
47 cm x 20 cm x 43 cm

CH-Y17

FAT BAR 50MM

8 KG
220 cm x 7 cm x 7 cm

CH-Y21

T-BELL WITH ROTATING HANDLES

5 KG
50 cm x 20 cm x 20 cm

CH-Y23

SUPERIOR BAR

23 KG
242 cm x 47 cm x 29 cm

CH-Y30

TIB BAR

4 KG
29 cm x 15 cm x 32 cm

CH-OS4

ALUMINUM COLLARS

0,5 KG
9 X 9 X 5 cm

CH-OS1

FLIP LOCK COLLARS

0,5 KG
9 x 9 x 5 cm

CH-OS2

SPRING COLLARS

0,5 KG
19 x 13 x 5 cm

FROM BUILDING STRENGTH AND TONING YOUR MUSCLES TO IMPROVING YOUR BALANCE AND STABILITY, THEY'RE A FANTASTIC WORKOUT TOOL THAT CAN HELP YOU TAKE YOUR FITNESS TO NEXT LEVEL. DUMBBELLS ARE VERSATILE AND CAN BE USED TO TARGET A WIDE RANGE OF MUSCLE GROUPS.

DUMMBELLS

WITH STORAGE

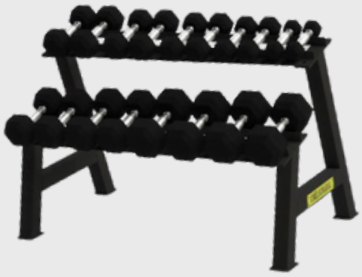

CH-HEX120B

2-20 HEX DUMBELL SET

235 KG
71 cm x 135 cm x 83 cm

WITH STORAGE

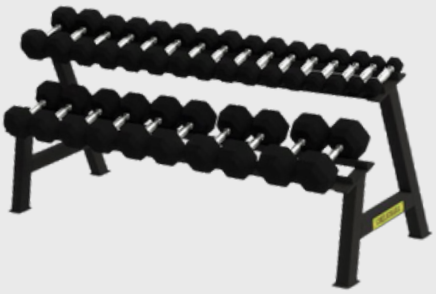

CH-HEX400B

2-30 HEX DUMBELL SET

453 KG
71 cm x 213 cm x 83 cm

WITH STORAGE

CH-HEX690B

2-40 HEX DUMBELL SET

767 KG
71 cm x 291 cm x 83 cm

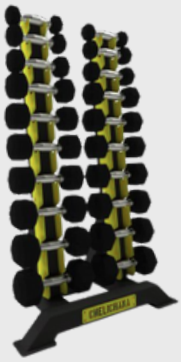

CH-HEX110B

1-10 HEX DUMBELL SET

149 KG
73 cm x 44 cm x 120 cm

CH-LD175

LONG DUMBELL SET

255 KG
83 cm x 104 cm x 152 cm

CH-EDset180

ELITE DUMBELL 2.5-20 KG

235 KG
71 cm x 135 cm x 83 cm

WITH STORAGE

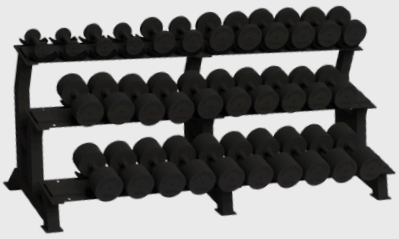

CH-EDset390

ELITE DUMBELL SET 2.5-30 KG

453 KG
71 cm x 213 cm x 83 cm

WITH STORAGE

CH-EDset680

ELITE DUMBELL SET 2.5-40 KG

767 KG
71 cm x 291 cm x 83 cm

WITH STORAGE

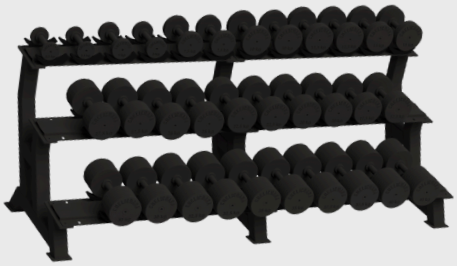

CH-EDset1080

ELITE DUMBELL SET 2.5-50 KG

989 KG
71 cm x 378 cm x 83 cm

OFTEN SEEN AS AN ESSENTIAL FUNCTIONAL FITNESS TOOL IN MANY GYMS, KETTLEBELLS OFFER EXTREME VERSATILITY AND A NICE BALANCE BETWEEN STRENGTH TRAINING AND CARDIOVASCULAR EXERCISE. USE THEM FOR ANYTHING FROM LUNGES AND GOBLET SQUATS TO PRESSES AND UNILATERAL WORK, EVEN MOBILITY TRAINING.

KETTLEBELLS

CH-CG8

ELITE KETTLEBELL 8KG

8 KG
29 x 29 x 20 cm

CH-CG12

ELITE KETTLEBELL 12KG

12 KG
29 x 29 x 20 cm

CH-CG16

ELITE KETTLEBELL 16KG

16 KG
29 x 29 x 20 cm

CH-CG20

ELITE KETTLEBELL 20KG

20 KG
29 x 29 x 20 cm

CH-CG24

ELITE KETTLEBELL 24KG

24 KG
29 x 29 x 20 cm

CH-CG28

ELITE KETTLEBELL 28KG

28 KG
29 x 29 x 20 cm

CH-CG32

ELITE KETTLEBELL 32KG

32 KG
29 x 29 x 20 cm

CH-CG36

ELITE KETTLEBELL 36KG

36 KG
29 x 29 x 20 cm

CH-CG40

ELITE KETTLEBELL 40KG

40 KG
29 x 29 x 20 cm

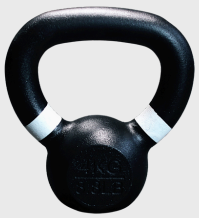

CH-EG4

EVOLUTION KETTLEBELL 4KG

4 KG
16 x 7 x 17,5 cm

CH-EG8

EVOLUTION KETTLEBELL 8KG

8 KG
18 x 10 x 20 cm

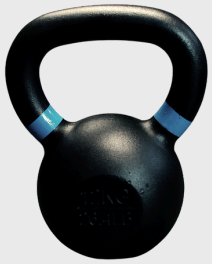

CH-EG12

EVOLUTION KETTLEBELL 12KG

12 KG
19 x 12 x 23 cm

CH-EG16

EVOLUTION KETTLEBELL 16KG

16 KG
20 x 14 x 24 cm

CH-EG20

EVOLUTION KETTLEBELL 20KG

20 KG
20 x 15 x 25 cm

CH-EG24

EVOLUTION KETTLEBELL 24KG

24 KG
21 x 16 x 26 cm

CH-EG30

EVOLUTION KETTLEBELL 28KG

28 KG
21 x 17 x 27 cm

CH-EG32

EVOLUTION KETTLEBELL 32KG

32 KG
21 x 18 x 27 cm

CH-EG36

EVOLUTION KETTLEBELL 36KG

36 KG
21 x 19 x 27 cm

CH-EG40

EVOLUTION KETTLEBELL 40KG

40 KG
21 x 20 x 28 cm

CH-EG44

EVOLUTION KETTLEBELL 44KG

44 KG
21 x 20 x 28 cm

CH-EG48

EVOLUTION KETTLEBELL 48KG

48 KG
21 x 21 x 28 cm

CH-MCB5

MACEBELL 5KG

5 KG
89,5 x 9 x 9 cm

CH-MCB10

MACEBELL 10KG

10 KG
112 x 12 x 12 cm

CH-MCB15

MACEBELL 15KG

15 KG
115 x 15 x 15 cm

OUR FUNCTIONAL PRODUCTS ARE DESIGNED TO ENHANCE ATLETIC PERFORMANCE AND CHALLENGE YOUR BODY THROUGH A VARIETY OF MOVEMENTS, OFFERING VERSATILITY, EFFICIENCY, AND THE ABILITY TO TARGET MULTIPLE MUSCLE GROUPS.

FUNCTIONAL EQUIPMENT

CH-ABM

ABMAT

1 KG
30 cm x 30 cm x 6 cm

CH-VEST

WEIGHT VEST

2 KG
40 cm x 40 cm x 10 cm

CH-BELT

LIFTING BELT

1 KG
40 x 30 x 20 cm

CH-CHGRT

LIFTING STRAPS

0,5 KG
7 x 5 x 5 cm

CH-ANKL

ANKLE BUCKLE

1 KG
10 cm x 10 cm x 10 cm

CH-HNDL

CABLE ATTACHMENT

1 KG
15 cm x 4 cm x 15 cm

CH-ANKS

ANKLE STRAP

1 KG
10 cm x 10 cm x 10cm

CH-KAR1

GYM RING WOODEN

2 KG
20 cm x 20 cm x 5 cm

CH-KAR2

GYM RING PLASTIC

2 KG
20 cm x 20 cm x 5 cm

CH-HAR

PULLING HARNESS

2 KG
30 cm x 30 cm x 6 cm

CH-BELT4

SQUAT/DIP BELT

3 KG
73 cm x 10 cm x 5 cm

CH-ABS

AB SLINGS

1 KG
50 cm x 20 cm x 10 cm

CH-BOX2

JUMP BOX WOODEN

24 KG
75 x 60 x 50 cm

CH-BOX1

JUMP BOX SOFT

26.5 KG
75 x 60 x 50 cm

CH-ROPE2

ROPE 5M POLYESTER

5 KG
60 cm x 30 cm x 20 cm

CH-ROPE1

ROPE 5M

5 KG
60 cm x 30 cm x 20 cm

CH-ROPE3

BATTLE ROPE 12M

12 KG
60 cm x 30 cm x 40 cm

CH-TRX

SUSPENSION TRAINER

1 KG
30 cm x 20 cm x 10 cm

CH-BLA

BICEPS BLASTER

2 KG
60 cm x 12 cm x 12 cm

CH-ROL

ROLLER

1 KG
35 x 15 x 15 cm

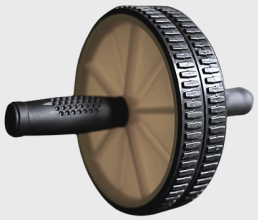

CH-ABW

AB WHEEL

2 KG
20 cm x 20 cm x 10 cm

CH-MAT1

TPE YOGA MAT

149 KG
73 cm x 44 cm x 120 cm

CH-BAG25

BULGARIAN BAG 25KG

25 kg
63 x 50 x 18 cm

CH-BAG20

BULGARIAN BAG 20KG

20 kg
63 x 50 x 18 cm

CH-BAG15

BULGARIAN BAG 15KG

15 kg
63 x 50 x 18 cm

CH-BAG10

BULGARIAN BAG 10KG

10 kg
63 x 50 x 18 cm

CH-BAG5

BULGARIAN BAG 5KG

5 kg
63 x 50 x 18 cm

CH-BAGSET

BULGARIAN BAG SET

75 kg
63 x 50 x 100 cm

CH-WB12

WALL BALL 12 KG

12 kg
30 x 30 x 30 cm

CH-WB9

WALL BALL 9 KG

9 kg
30 X 30 X 30 cm

CH-WB6

WALL BALL 6 KG

6 kg
30 x 30 x 30 cm

CH-WB4

WALL BALL 4 KG

4 kg
30 x 30 x 30 cm

CH-WBSET

WALL BALL SET 4-6-9-12 KG

32 kg
90 x 30 x 30 cm

CH-SLAM5

SLAM BALL 5 KG

5 kg
24 x 24 x 24 cm

CH-SLAM10

SLAM BALL 10 KG

10 kg
24 x 24 x 24 cm

CH-SLAM15

SLAM BALL 15 KG

15 kg
24 x 24 x 24 cm

CH-SLAM20

SLAM BALL 20 KG

5 kg
24 x 24 x 24 cm

CH-SLAM25

SLAM BALL 25 KG

10 kg
24 x 24 x 24 cm

CH-SLAMSET

SLAM BALL SET 5-25KG

15 kg
60 x 30 x 2 cm

CH-LASET

RESISTANCE BAND SET 13-83MM

1 kg
30 x 30 x 2 cm

CH-LA83

RESISTANCE BAND 83MM

1 kg
30 x 30 x 2 cm

CH-LA64

RESISTANCE BAND 64MM

1 kg
30 X 30 X 2 cm

CH-LA45

RESISTANCE BAND 45MM

1 kg
30 x 30 x 2 cm

CH-LA32

RESISTANCE BAND 32MM

1 kg
30 x 30 x 2 cm

CH-LA21

RESISTANCE BAND 21MM

1 kg
30 x 30 x 2 cm

CH-DROP

DROP PADS

9 KG
77 x 62 x 16 cm

CH-NBR

YOGA MAT BLACK

1 kg
160 x 60 x 4 cm

CH-JMP

JUMPING ROPE BLACK

1 kg
10 x 15 x 4 cm

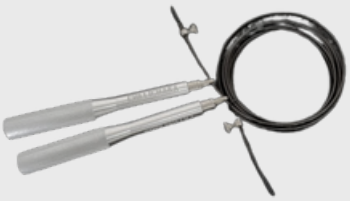

CH-JMP2

JUMPING ROPE ALUMINUM

9 KG
77 x 62 x 16 cm

Improve your heart health, boost your endurance and reach your weight loss goals with our cardio equipment

CARDIO

CAR-06

AIRBIKE

55 KG
120 x 65 x 125 cm

CAR-07

TREADMILL 1002B

175 KG
200 x 90 x 156 cm

CAR-05

AIRRUNNER

165 KG
170 x 85 x 158 cm

CAR-02

ERGOROW

30 KG
240 X 62 X 105 cm

Create the workout area of your dreams with rubber and foam gym flooring, artificial turfs, poured rubber and more

FLOORS

FLOORS

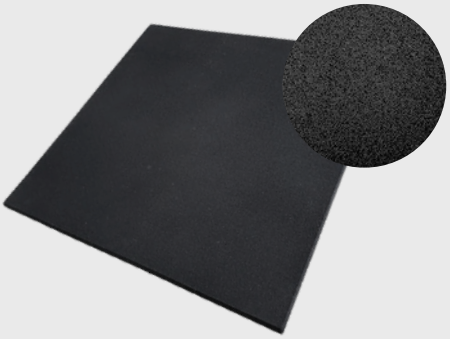

CH-RF20B

RUBBER FLOOR

19 KG
100 cm x 100 cm x 2 cm

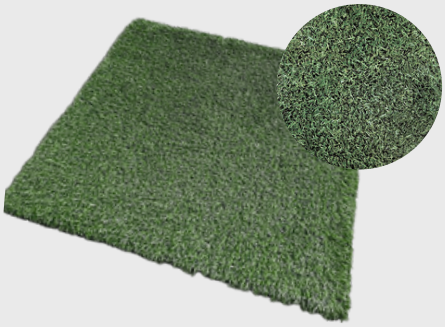

CH-GF20

GREEN FLEX 20MM

6 KG
50 cm x 50 cm x 2 cm

CH-PF30PF

PLAYFLEX 40MM

7 KG
50 cm x 50 cm x 3 cm

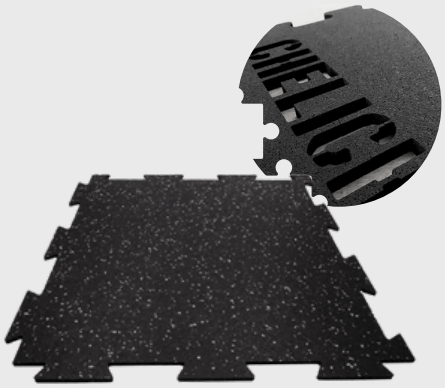

CH-RF10

RUBBER FLOOR PUZZLE

10 KG
100 cm x 100 cm x 1 cm

CH-RFH40

RUBBER CLINKER H 40MM

1 KG
10 cm x 10 cm x 10 cm

CH-GT12.5X2

GREENTRACK 12.5 X 2M

60 KG
1250 cm x 200 cm x 2 cm

CH-RFX

POURED RUBBER

200 KG
1000 cm x 1000 cm x 2 cm

Unleash your inner fashion athlete with the chelichana apparel. Our high-performance pieces seamlessly blend elevated style and active functionality, empowering you to look and feel your best no matter the occasion.

APPAREL

APPAREL

CH-TSBLACK

TSHIRT BLACK

S , M ,L ,XL

CH-TSGRAY

TSHIRT GRAY

S , M , L , XL

CH-TSGREEN

TSHIRT MILITARY

S, M , L ,XL

CH-TSLIFT

TSHIRT LIFT GREY

S , M , L , XL

CH-TSNAVY

TSHIRT NAVY

S , M , L , XL

CH-TSORANGE

TSHIRT ORANGE

S, M , L ,XL

CH-LSBLACK

LONG SLEEVE BLACK

S , M , L , XL

CH-LSGRAY

LONG SLEEVE GRAY

S , M , L , XL

CH-HDGRAY

HOODIE GRAY

S, M , L ,XL

APPAREL

CH-TSWHITE

TSHIRT WHITE

S , M ,L ,XL

CH-TSPINK

TSHIRT PINK

S , M , L , XL

CH-TSBLKKID

TSHIRT KIDS BLACK

S , M , L , XL

CH-HDPINKKID

HOODIE BABY PINK

S , M , L , XL

CH-HDBLKKID

HOODIE BABY BLACK

S , M , L , XL

CH-HDBLUEKID

HOODIE BABY BLUE

S, M , L ,XL

CH-HDBLACK

HOODIE BLACK

S , M , L , XL

CH-HDNAVY

HOODIE NAVY

S , M , L , XL

CH-HDSAND

HOODIE SAND

S, M , L ,XL

Unlock your full potential and push your limits like never before. Our outdoor equipment is engineered to help you build strength, boost endurance, and achieve your wellness goals in an energizing open-air setting.

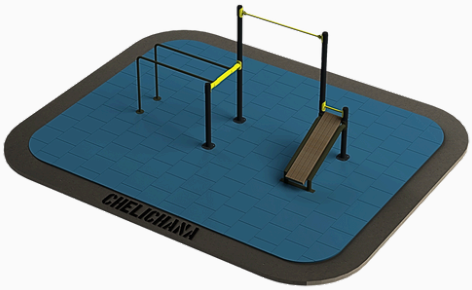

CH-SWXS

SW PARK XS

19 KG
100 cm x 100 cm x 2 cm

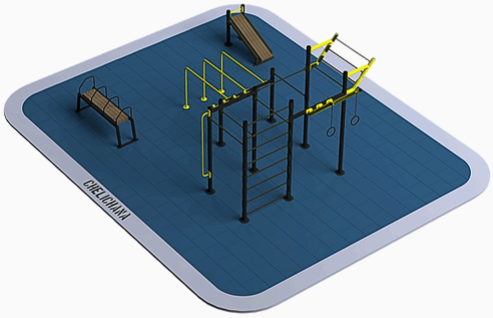

CH-SWS

SW PARK S

6 KG
500 cm x 500 cm x 20 cm

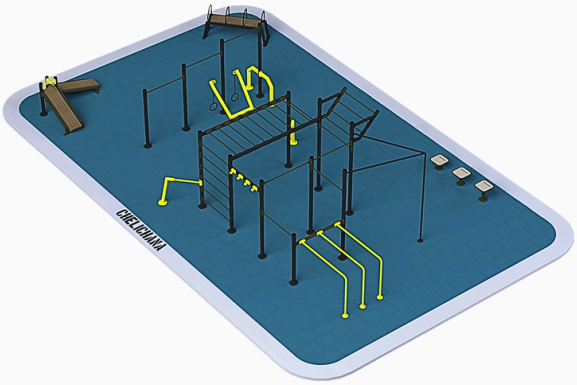

CH-SWM

SW PARK M

19 KG
100 cm x 100 cm x 2 cm

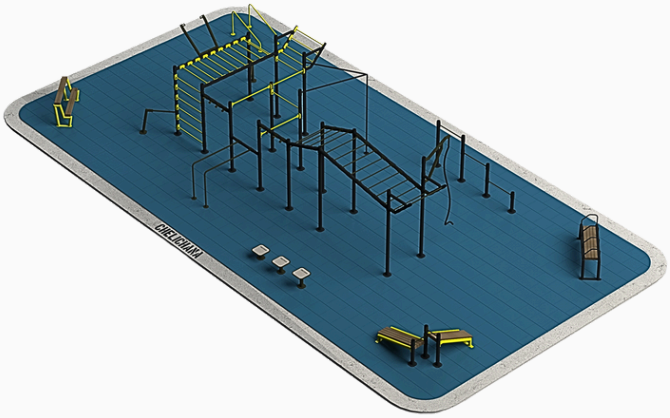

CH-SWL

SW PARK L

6 KG
500 cm x 500 cm x 20 cm

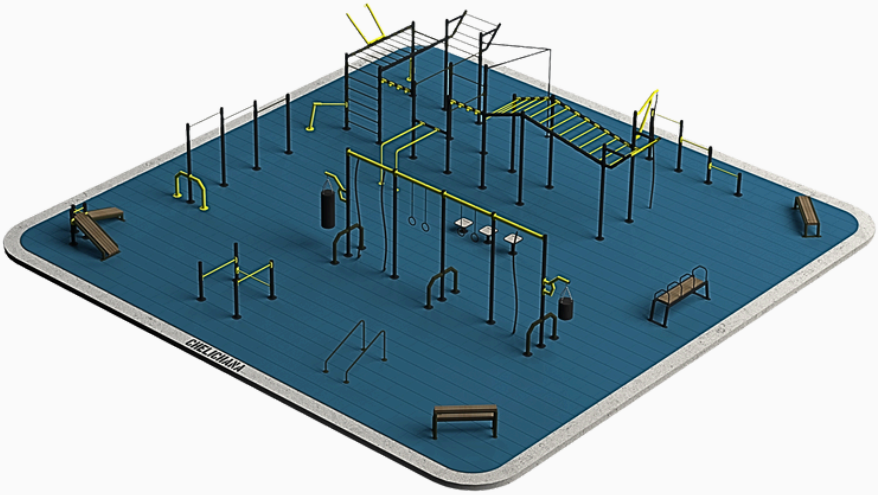

CH-SWXL

SW PARK XL

6 KG
500 cm x 500 cm x 20 cm

STREET WORKOUT

Street workout parks offer a multi-sensory experience, providing high-quality content for exercisers of all ages and fitness levels. We strive to make our workout areas more challenging and interactive, allowing both recreational users and professional athletes to continually discover new training challenges on our equipment.

Full range of services – planning, design, manufacturing, installation, warranty.

Our parks are manufactured and certified according to the standards: EN 16630, EN 1090, and EN 16899, ensuring they meet the highest global safety standards during use. In addition to offering opportunities for top-notch training, the parks encourage community engagement in an active and healthy lifestyle.

CH-C07

BENCH PRESS

208 kg
150 x 249 x 110 cm

CH-C08

LEG PRESS

302 kg
117 x 286 x 131 cm

CH-C10

SHOULDER PRESS

217 kg
139 x 163 x 161 cm

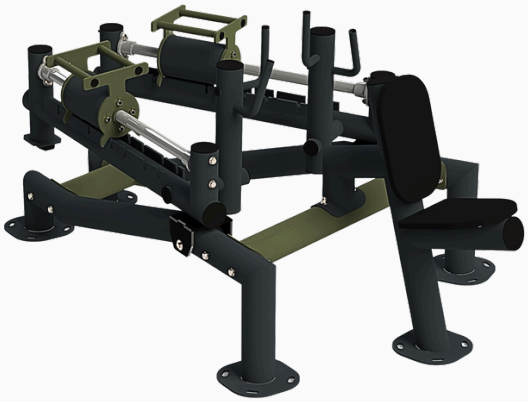

CH-C09

SEATED ROW

214 kg
134 x 211 x 97 cm

CH-C11

LAT PULLDOWN

237 kg
174 x 248 x 179 cm

CH-C12

DEADLIFT

332 kg
168 x 232 x 135 cm

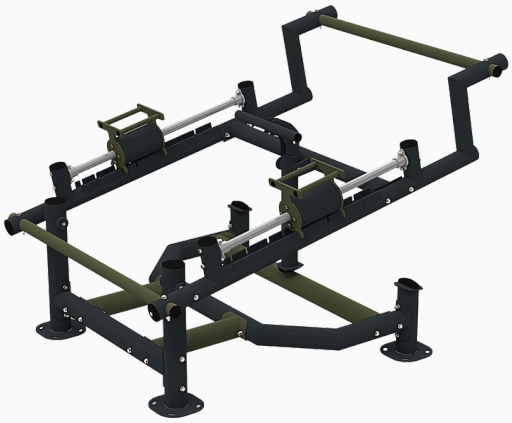

CH-C13

SQUAT

254 kg
168 x 211 x 142 cm

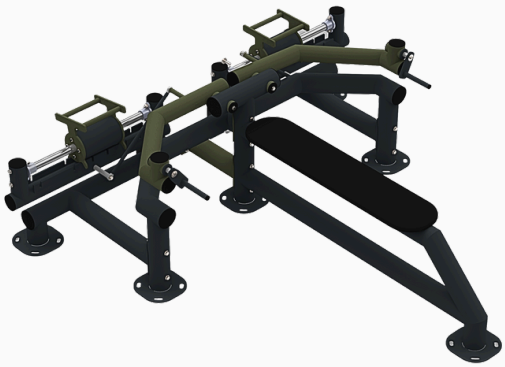

CH-C14

BUTTERFLY

263 kg
234 x 228 x 80 cm

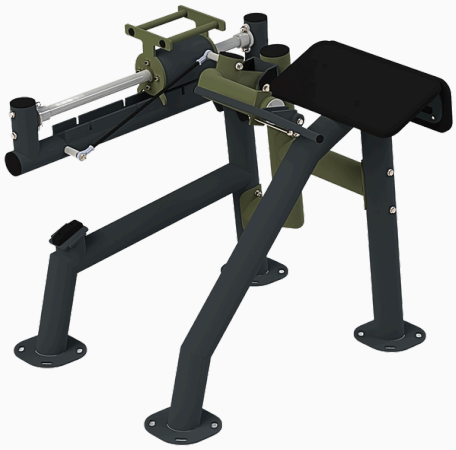

CH-C15

BICEPS TRAINER

142 kg
115 x 126 x 110 cm

CH-C16

TRICEPS TRAINER

218 kg
142 x 188 x 208 cm

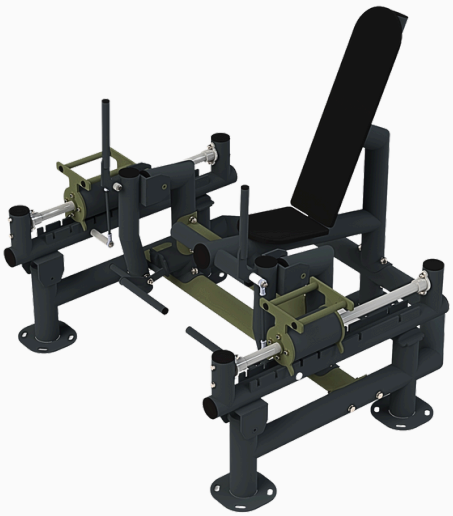

CH-C17

LEG EXTENSION

277 kg
164 x 159 x 147 cm

CH-C18

WOD BOX XS

411 KG
143 x 298 x 280 cm

CH-C19

WOD BOX S

486 KG
143 X 456 X 280 cm

CH-C20

WOD BOX M

683 KG
529 X 337 X 280 cm

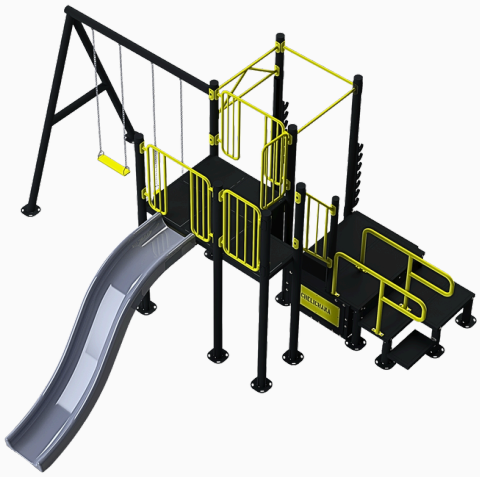

CH-C21

WOD BOX L

700 KG
529 x 573 x 280 cm

CH-C22

WOD BOX XL

840 KG
529 x 692 x 280 cm

THE ULTIMATE FUNCTIONAL OUTDOOR PLAYGROUND

WOD BOX

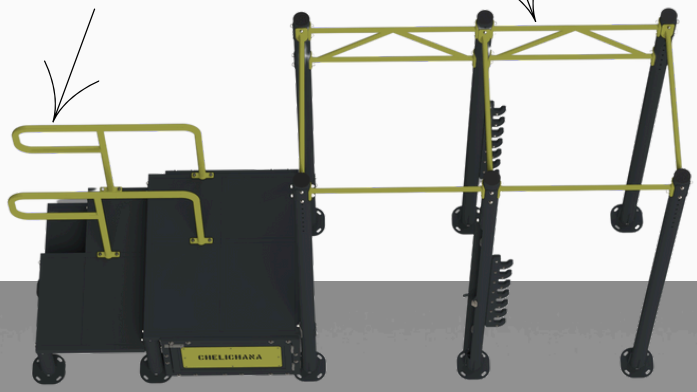

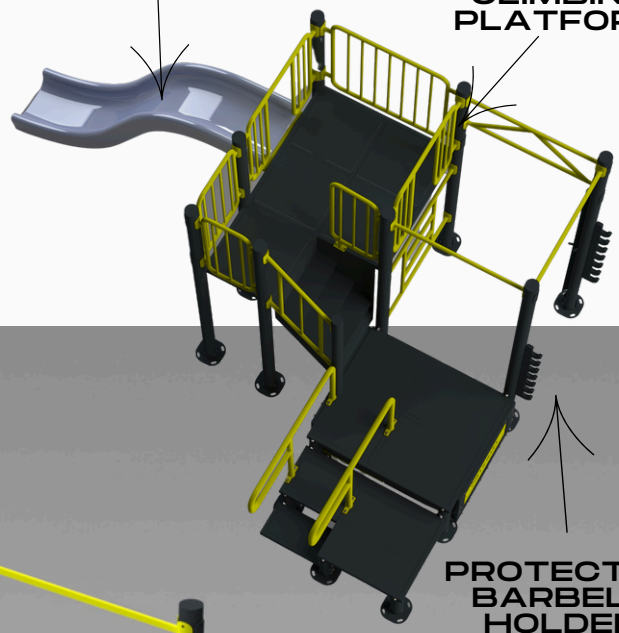

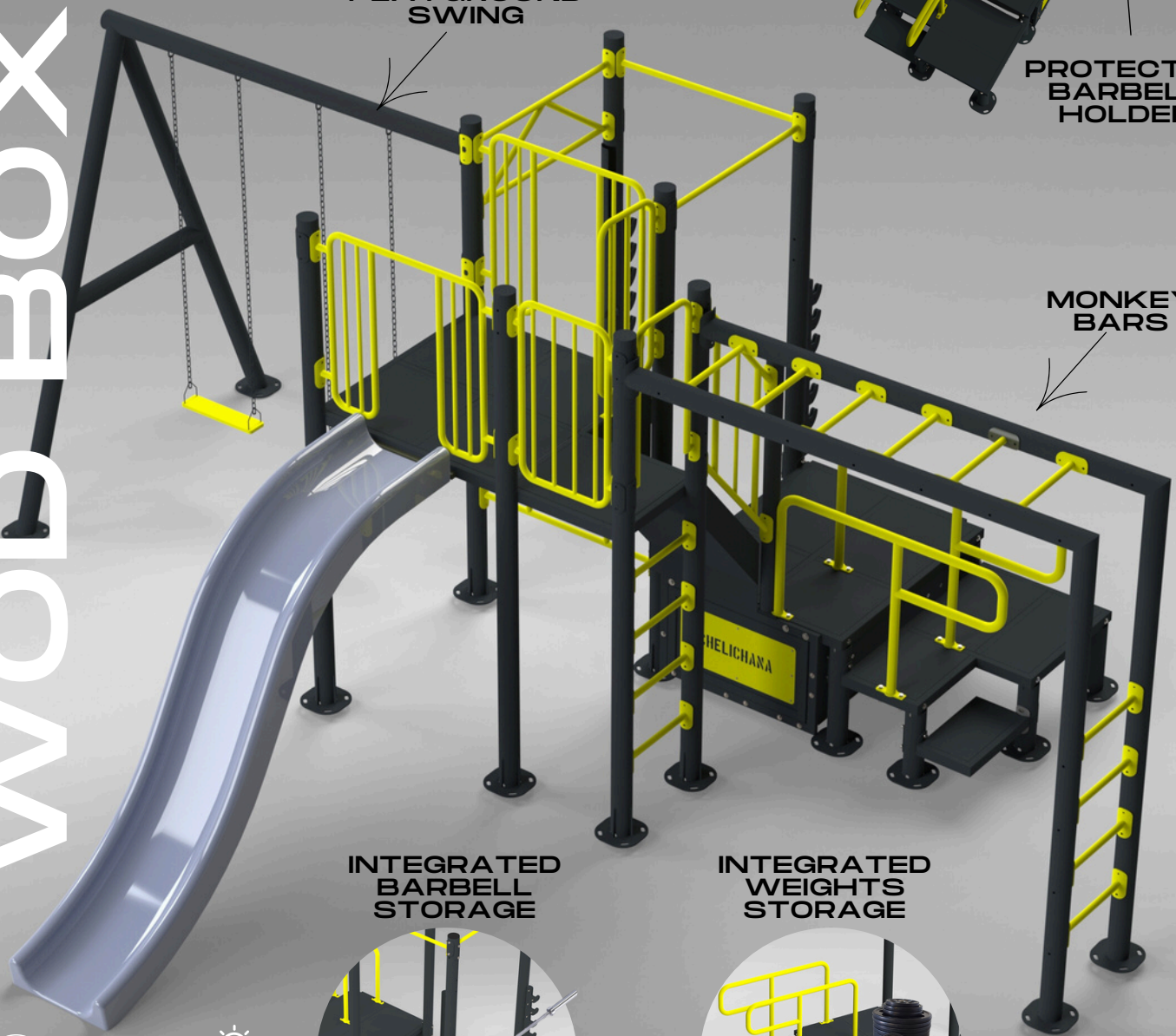

INTEGRATED BARBELL STORAGE

INTEGRATED WEIGHTS STORAGE

MULTIPLE COLOR OPTIONS

UV PROTECTED

PRACTICAL DESIGN

LONG LASTING HEAVY DUTY STEEL

FORGE YOUR STRENGTH WITH US

info@chelichana.hr

chelichana

www.chelichana.hr